IF IT IS FOUND DESIRABLE TO CHANGE ANY TOLERANCE OR OTHER DETAIL SPECIFIED ON THIS DRAWING NOTIFY THE PURCHASER PROMPTLY.

MAXIMUM ALLOWABLE TOLERANCES HAVE BEEN DETERMINED AND DEVIATIONS WILL BE CAUSE FOR REJECTION. REMOVE ALL BURRS AND SHARP EDGES

CK-297

REQ. PER UNIT	USED ON			
	MODEL	PROJECT NO.	ASS'Y. NO.	DATE
	VOX-1			4-22-55
	VOX-2			4-22-55

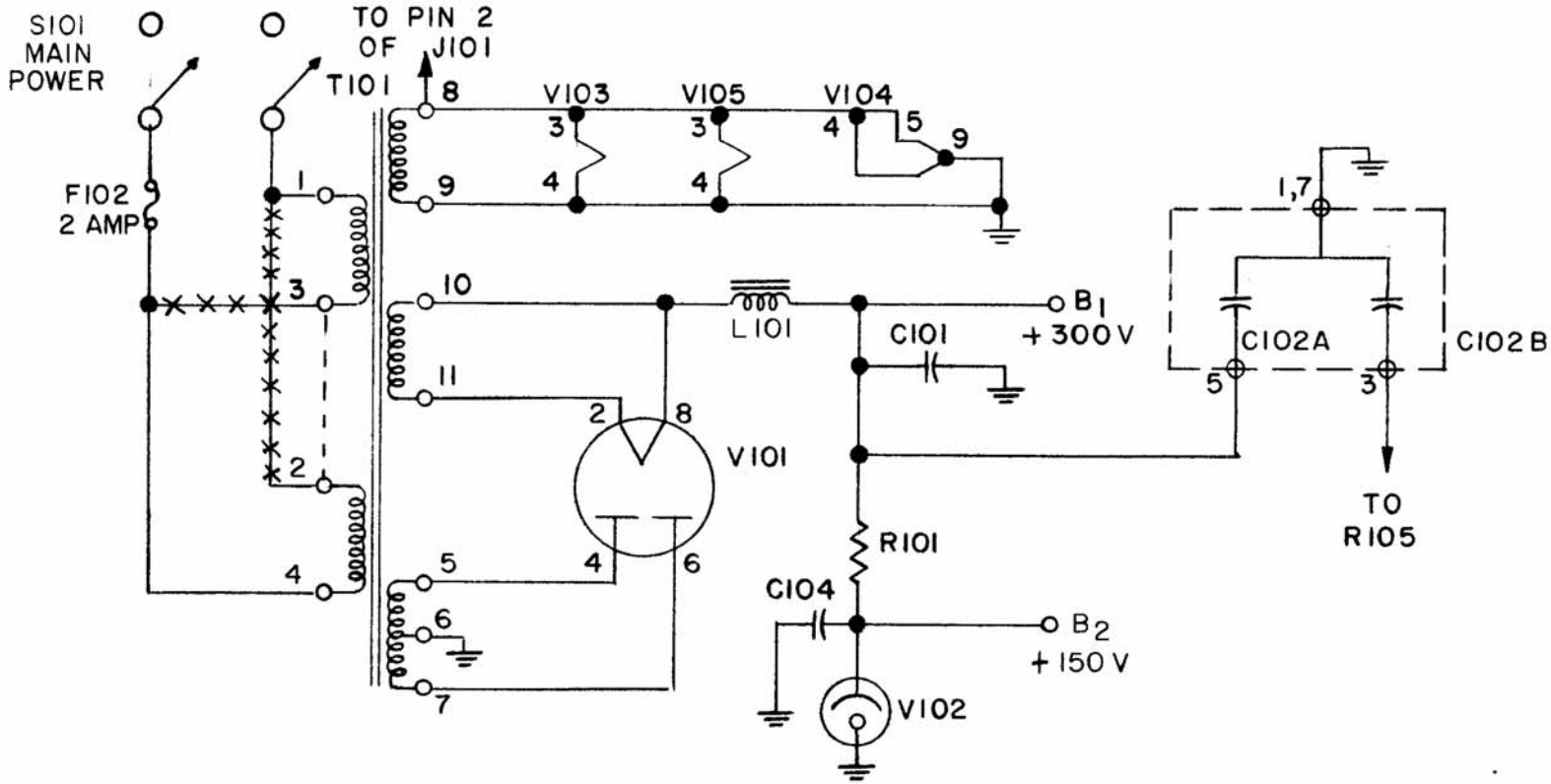

REQ.	ITEM	PART NO.	DESCRIPTION	SYMBOL

STOCK SIZE

MATERIAL | WEIGHT PER PC.

TYPE & TEMPER

HEAT TREAT. SPEC.

FINISH & SPEC. NO.

THE TECHNICAL MATERIEL CORP.
MAMARONECK. NEW YORK

POWER SUPPLY CIRCUIT

DRAWN	ELEC. DES. APP.	MECH. DES. APP.

CHECKED	FINAL APPROVAL
	A.J.I.

CK-297

ISSUE	ITEM	CHANGED FROM	DATE	CN. NO.	DRAFTS	CHECKER	ENG. APP.

TOLERANCES

ALL OTHERS: DEC. DIM. ± FRAC. DIM. ± ANGULAR DIM. ±

SCALE

DRILL, PUNCH, COMMERCIAL STOCK SIZES AND MANUFACTURERS TOLERANCES ARE NOT INCLUDED.

FORM — 108