THE CONTENTS OF THIS DRAWING ARE THE EXCLUSIVE PROPERTY OF THE TECHNICAL MATERIEL CORP. ITS UNAUTHORIZED USE FOR REPRODUCTION IN WHOLE OR IN PART IS STRICTLY FORBIDDEN.

REQ. PER UNIT	USED ON MODEL	ASS'Y. NO.	DATE		
1	TTR-10	AX-418	5-25-63	CL-319	A

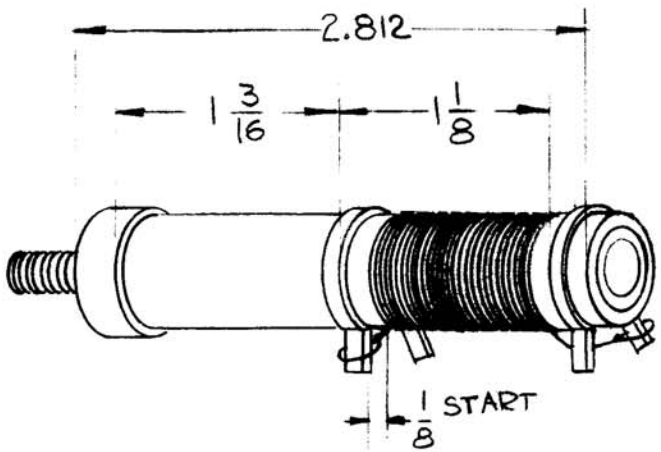

WINDING INFORMATION

1. 66 TURNS, CLOSEWOUND, SINGLE LAYER
2. HOLLOW COIL FORM, MATERIAL - PHENOLIC
3. CORE - POWDERED IRON

ELECTRICAL SPECIFICATIONS

INDUCTANCE L = 180 uh (170-190 uh)

Q = 120 OR GREATER

FREQUENCY = 790 KC

D.C. RESISTANCE - NOT RATED

CURRENT RATING - NOT RATED

SYM	DESCRIPTION	DATE	CH. NO.	DRAFTS.	CHECKER	ENG. APP.
A	DIM 2.812 WAS 2.567	8.26.64	12228	WB	JCK	RdW

UNLESS OTHERWISE SPECIFIED DIMENSIONS ARE IN INCHES AND INCLUDE CHEMICALLY APPLIED OR PLATED FINISHES

SCALE NONE

DECIMALS .X ±.05 .XX ±.01 .XXX ±.005 — TOLERANCES — FRACTIONS ± 1/64 ANGLES ± 0° 30'

CODE A — 2A-3174

REQ.	ITEM	PART NO.	DESCRIPTION	SYMBOL
			R. KOHN	

STOCK SIZE

MATERIAL

TYPE & TEMPER — HEAT TREAT. SPEC.

FINISH & SPEC. NO.

THE TECHNICAL MATERIEL CORP.
MAMARONECK. NEW YORK

COIL, RF FIXED

DRAWN	CHECKED	FINAL APPROVAL
G DL	6/11/63	BP

ELEC. DES. APP.	MECH. DES. APP.		
RON KOHN 6/14/63	WAP	CL-319	A