REQ. PER UNIT	USED ON MODEL	ASS'Y. NO.	DATE	CL 327	Ø
—	LFS-1	A 3311	12-9-63		

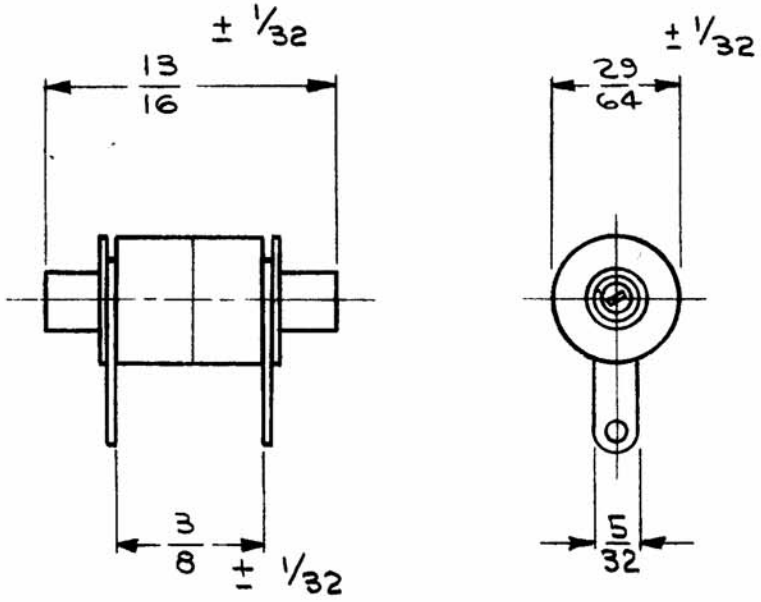

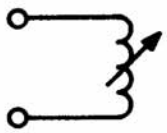

SCHEMATIC DIAGRAM

COIL, R.F., TUNED

WINDING DATA:
- TYPE = Pi
- NO. OF TURNS = 68

INDUCTANCE = 14.2μh ±10%
D.C. RESISTANCE = 1.2-1.4
CURRENT RATING = NOT RATED
COIL FORM DATA:
- MATERIAL = MYLAR

CORE DATA:
- QUANTITY = 1
- MATERIAL = FERRITE-ADJUSTABLE

CASE DATA:
- MATERIAL = POWDERED IRON
- FINISH = NONE

TERMINAL DATA:
- QUANTITY = 2
- TYPE = SOLDER LUG

SYM	DESCRIPTION	DATE	CH. NO.	DRAFTS	CHECKER	ENG. APP.
Ø	ORIGINAL RELEASE FOR PRODUCTION	7-27-64	Ø	G.D.L		

UNLESS OTHERWISE SPECIFIED DIMENSIONS ARE IN INCHES AND INCLUDE CHEMICALLY APPLIED OR PLATED FINISHES

SCALE DO NOT SCALE

DECIMALS .X ±.05 .XX ±.01 .XXX ±.005 — TOLERANCES — FRACTIONS ± 1/64 ANGLES ± 0° 30′

CODE A — 4A 3358

REQ.	ITEM	PART NO.	GELLMAN DESCRIPTION	SYMBOL

STOCK SIZE: SEE SPECS

MATERIAL

TYPE & TEMPER — HEAT TREAT. SPEC.

FINISH & SPEC. NO.

THE TECHNICAL MATERIEL CORP.
MAMARONECK. NEW YORK

COIL, R.F., TUNED

DRAWN — CHECKED — FINAL APPROVAL

ELEC. DES. APP. — MECH. DES. APP.

CL 327 Ø

TMC FORM 108-A

STOCK NO. 440H