REQ. PER UNIT	USED ON MODEL	ASS'Y. NO.	DATE	
1	CHG-1		1-10-61	PX-602

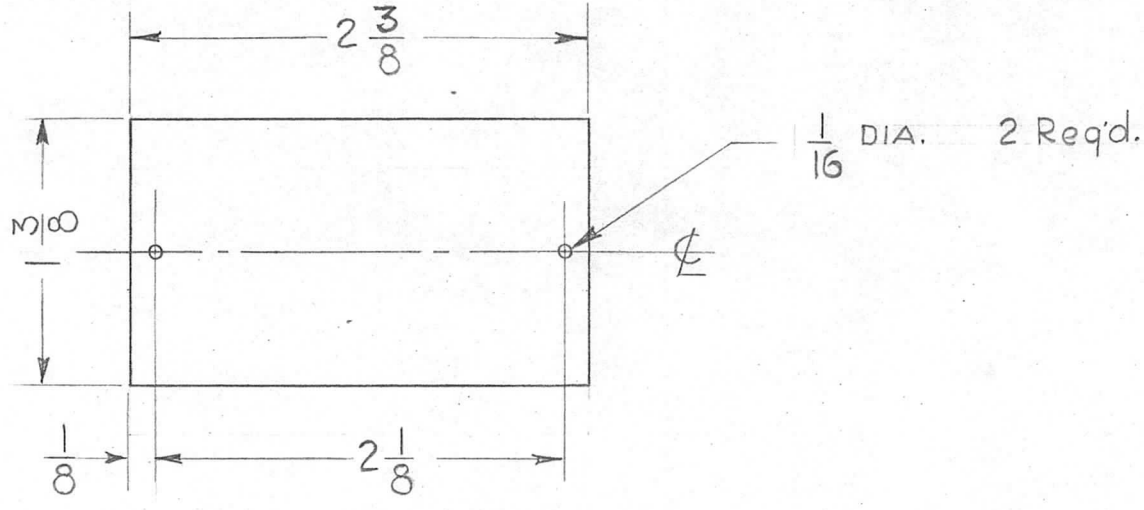

ISSUE	ITEM	CHANGED FROM	DATE	CH. NO.	DRAFTS	CHECKER	ENG. APP.

TOLERANCES

DEC. DIM. ±
FRAC. DIM. ±
ANGULAR DIM. ±

SCALE:

MAXIMUM ALLOWABLE TOLERANCES HAVE BEEN DETERMINED AND ANY DEVIATIONS WILL BE CAUSE FOR REJECTION. REMOVE ALL BURRS AND SHARP EDGES

REQ.	ITEM	PART NO.	DESCRIPTION	SYMBOL

.032
STOCK SIZE

PLEXE GLAS CLEAR
MATERIAL

TYPE & TEMPER | HEAT TREAT. SPEC.

FINISH & SPEC. NO.

THE TECHNICAL MATERIEL CORP.
MAMARONECK, NEW YORK

DIAL FIDUCIARY
BAND SWITCH

DRAWN	CHECKED	FINAL APPROVAL
[signature]	[signature]	[signature]
ELEC. DES. APP	MECH. DES. APP	PX-602

FORM 108-A