REQ. PER UNIT	USED ON			PX993	Ø
	MODEL	ASS'Y. NO.	DATE		
	TF 351	A4498	7-14-66		

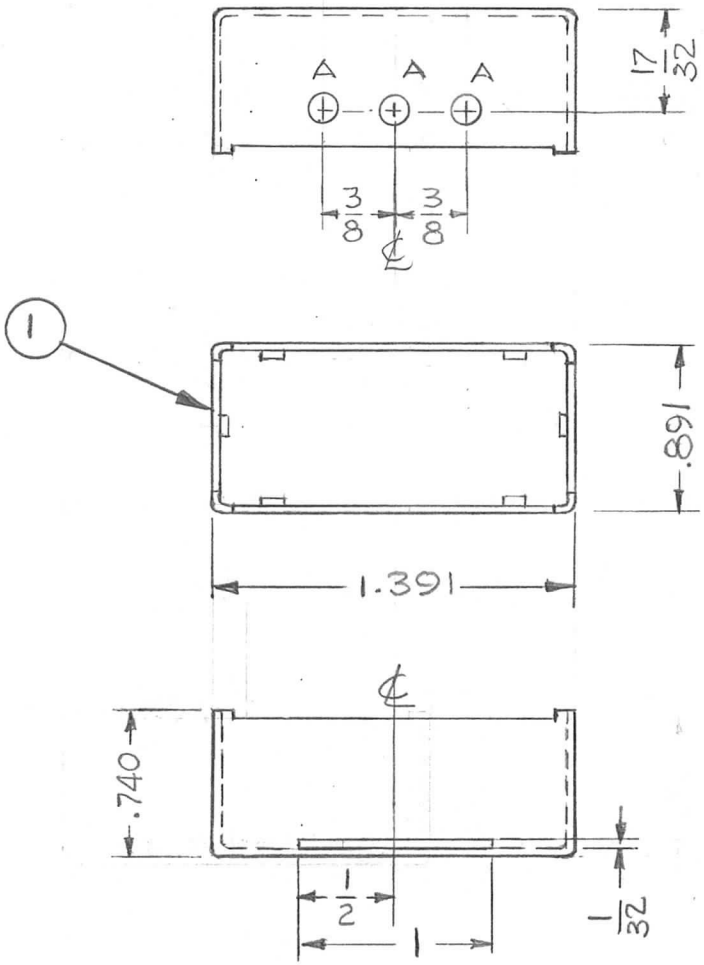

HOLE	DESCRIPTION	REQ.
A	11/64 DIA.	3

REF. LD 2175

REQ.	ITEM	PART NO.	DESCRIPTION	SYMBOL
1	1	BX 219-1	CASE, PLASTIC	

SYM	DESCRIPTION	DATE	CH. NO.	DRAFTS	CHECKER	ENG. APP.
Ø	ORIGINAL RELEASE	10/5/66	Ø			

UNLESS OTHERWISE SPECIFIED
DIMENSIONS ARE IN INCHES AND INCLUDE
CHEMICALLY APPLIED OR PLATED FINISHES

SCALE: DO NOT SCALE

TOLERANCES
DECIMALS: .X ± .05, .XX ± .01, .XXX ± .005
FRACTIONS: ± 1/64
ANGLES: ± 0° 30′

CODE: B

STOCK SIZE

MATERIAL

TYPE & TEMPER | HEAT TREAT. SPEC.

FINISH & SPEC. NO.

THE TECHNICAL MATERIEL CORP.
MAMARONECK, NEW YORK

CASE, MACHINING

DRAWN	CHECKED	FINAL APPROVAL
G.D.L		

ELEC. DES. APP. | MECH. DES. APP. | PX993 | Ø

MIL. APP.

APPROVAL NO. 440H