A 1495 B

Stamp Can as shown – 1/8 high black Gothic.
Note- Stamp TMC Insigna & Approval on Side of Can.

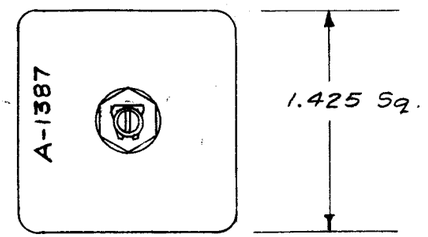

Cement coil to bushing, SM-110 with item 3.

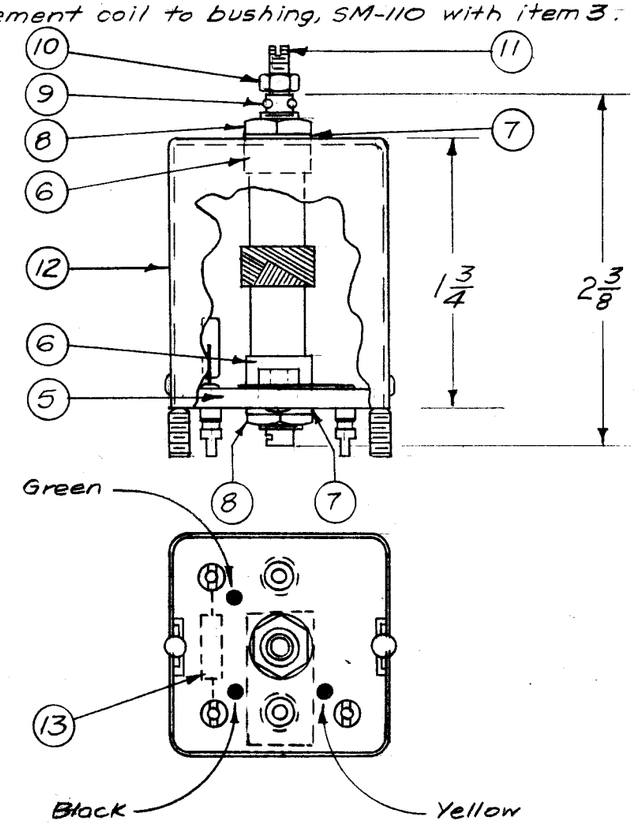

Color Code Terminal Board as Shown.

Winding Machine Data

Cam Gear	105
Driver Gear	69
Cam	.250

Winding Data

1. Start coil 5/8" from end of form. (item 1)
2. Bring out tap at 50 turns.
3. End coil at 150 turns. - Leads approx. 3" long.
4. Stake leads to coil form with GL-103 (item 3)
5. Bake for 1/2 hour at 215° F.
6. Immediately apply coating of GL-104-2 (item 4)
7. Bake hard for 1/2 hour at 215°F.
8. Test as below.
9. Assemble as shown at left.

Test Data – (Without Bushings or core.)

L1 (Grn. & Blk.) 225 (210 to 240) microhenries
Q = 75 or Greater Freq. = 790 Kc
L2 (Grn. & Yel.) 115 (100 to 125) microhenries
Q = 50 or Greater Freq. = 790 Kc

Use Boonton Radio Corp. Q Meter Model 160A or Equiv.

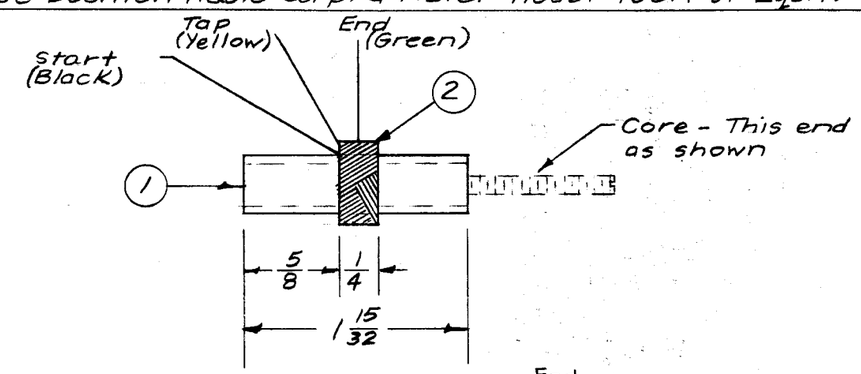

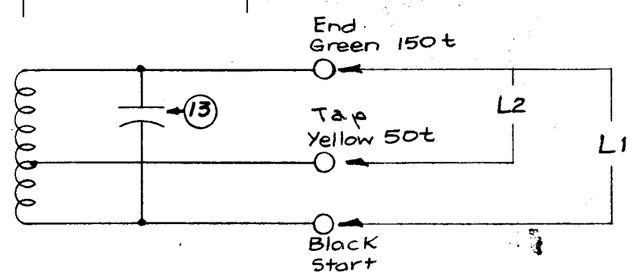

NOTICE TO PERSONS RECEIVING THIS DRAWING

THE TECHNICAL MATERIEL CORPORATION claims proprietary right in the material disclosed hereon. This drawing is issued in confidence for engineering information only and may not be reproduced or used to manufacture anything shown hereon without permission from THE TECHNICAL MATERIEL CORPORATION to the user. This drawing is loaned for mutual assistance and is subject to recall at any time.

Property of:
THE TECHNICAL MATERIEL CORPORATION
MAMARONECK, NEW YORK

REQ.	ITEM	PART NO.	DESCRIPTION	SYMBOL
X	14	BS-100	Solder, Soft	
1	13	CM15F 431G03	Capacitor, Fixed, Mica	
1	12	A-1385	Can Ass'y.	
1	11	CI-109-16	Core	
1	10	NTH0632BN8	Nut, Hex.	
1	9	SP-102	Spring, Lock	
2	8	NT-102	Nut, Hex.	
2	7	LWI25LRN	Lockwasher, Int.	
2	6	SM-110	Bushing, Coil Form	
1	5	A-1386	Terminal Board Ass'y.	
X	4	GL-104-2	Insulex, U85	
X	3	GL-103	Cement, Duco	
X	2	WI-104-541-SCQS	Wire, Litz	
1	1	CF-117-1.468	Coil Form	

ISSUE	ITEM	CHANGED FROM	DATE	CH. NO.	DRAFTS	CHECKER	ENG. APP.
B		ITEM 13 WAS CM20D431G. ITEMS 7 & 10 "N" WAS "C"	3-28-67	18047	L.A.K.		
A	1	DWG. NO. WAS A-1397 - A-1397 IS NOW CLIST. DWG	1/3/58	1	16		AJJ

TOLERANCES	SCALE:
DEC. DIM. ±	MAXIMUM ALLOWABLE TOLERANCES HAVE BEEN DETERMINED AND ANY DEVIATIONS WILL BE CAUSE FOR REJECTION.
FRAC. DIM. ±	REMOVE ALL BURRS AND SHARP EDGES
ANGULAR DIM. ±	

REQ. PER UNIT	MODEL	PROJECT NO.	SYMBOL NO.	DATE
1	A-1387			5-1-58
1	MSR-1		Z3	3-4-57

USED ON

STOCK SIZE: //

MATERIAL: //

TYPE & TEMPER: // HEAT TREAT. SPEC.: //

FINISH & SPEC. NO.: //

THE TECHNICAL MATERIEL CORP.
MAMARONECK. NEW YORK

FIRST OSCILLATOR ASS'Y.
(A-1387)

DRAWN	CHECKED	FINAL APPROVAL
16 3-4-57		AJJ

ELEC. DES. APP.	MECH. DES. APP.	
PLK		A 1495 B