REQ. PER UNIT	USED ON MODEL	ASS'Y. NO.	DATE		
1	GPT-200K	AX-395	5-26-64	AP 124	0

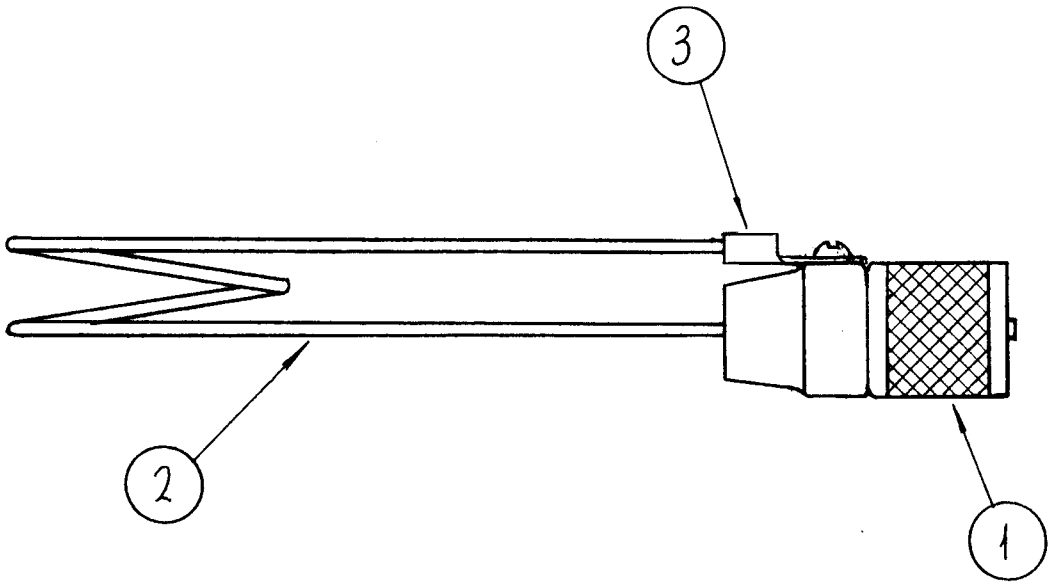

REQ.	ITEM	PART NO.	DESCRIPTION	SYMBOL
X	4	BS 100	SOLDER, SOFT	
1	3	TE 141-1	TERMINAL LUG	
1	2	CL 183	COIL, RF, FIXED	
1	1	PL 259A-TEF	PLUG, SIGNAL CORPS TYPE	

F. BUDETTI

SYM	DESCRIPTION	DATE	CH. NO.	DRAFTS	CHECKER	ENG. APP.
0	ORIGINAL RELEASE FOR PRODUCTION	6.18.64		JB		

UNLESS OTHERWISE SPECIFIED
DIMENSIONS ARE IN INCHES AND INCLUDE
CHEMICALLY APPLIED OR PLATED FINISHES

TOLERANCES
DECIMALS .X ±.05 .XX ± .01 .XXX ±.005
FRACTIONS ± 1/64
ANGLES ± 0° 30′

SCALE

CODE

STOCK SIZE

MATERIAL

TYPE & TEMPER | HEAT TREAT. SPEC.

FINISH & SPEC. NO.

THE TECHNICAL MATERIEL CORP.
MAMARONECK. NEW YORK

PROBE, WAVE GUIDE

DRAWN	CHECKED	FINAL APPROVAL	
SRG	aa		
ELEC. DES. APP.	MECH. DES. APP.	AP 124	0

TMC FORM 108-A

REPROVEL NO. 440H 16106