REQ. PER UNIT	USED ON MODEL	ASS'Y. N.	DATE	BB-122	A
1	GPT 10K	AX-137	5-13-59		

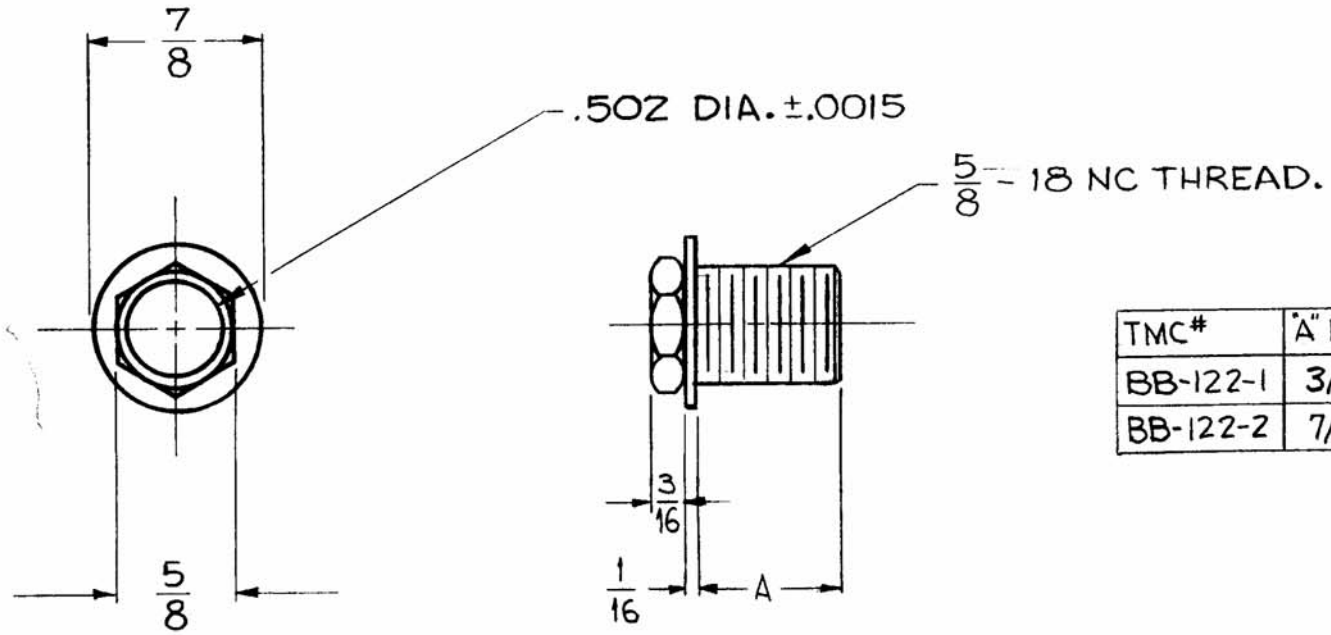

TMC#	"A" DIM.	SUPERCEDES TMC PART NO.
BB-122-1	3/4	BB-122
BB-122-2	7/16	—

ISSUE	ITEM	CHANGED FROM	DATE	CH. NO.	DRAFTS	CHECKER	ENG. APP.
A	1	ADDED CHART, CHG. 3/4 TO "A"	7-25-62	6905	SRG		

TOLERANCES

DEC. DIM. ±
FRAC. DIM. ±
ANGULAR DIM. ±

SCALE:

MAXIMUM ALLOWABLE TOLERANCES HAVE BEEN DETERMINED AND ANY DEVIATIONS WILL BE CAUSE FOR REJECTION. REMOVE ALL BURRS AND SHARP EDGES

REQ.	ITEM	PART NO.	DESCRIPTION	SYMBOL

STOCK SIZE

BRASS

MATERIAL

TYPE & TEMPER | HEAT TREAT. SPEC.

FINISH & SPEC. NO.

THE TECHNICAL MATERIEL CORP.
MAMARONECK, NEW YORK

BEARING, PANEL

DRAWN	CHECKED	FINAL APPROVAL
J.C. BIELE		
ELEC. DES. APP	MECH. DES. APP	

BB-122 A

FORM 108-A