THE CONTENTS OF THIS DRAWING ARE THE EXCLUSIVE PROPERTY OF THE TECHNICAL MATERIEL CORP. ITS UNAUTHORIZED USE OR REPRODUCTION IN WHOLE OR IN PART IS STRICTLY FORBIDDEN.

REQ. PER UNIT	USED ON MODEL	ASS'Y. NO.	DATE	
1	CAB-3		1-15-62	CAB-3

SPECIFICATIONS

OVERALL DIM. ~ $20\frac{3}{8} \times 17 \times 11\frac{27}{32}$
CABINET MATERIAL - Steel, Cold Rolled
CABINET FINISH - RCAF Gray Wrinkle
PANEL MTG. - Universal Spacing
PANEL SIZE - $19 \times 10\frac{1}{2}$
MTG. DIM. - $13\frac{1}{2} \times 15\frac{1}{4}$

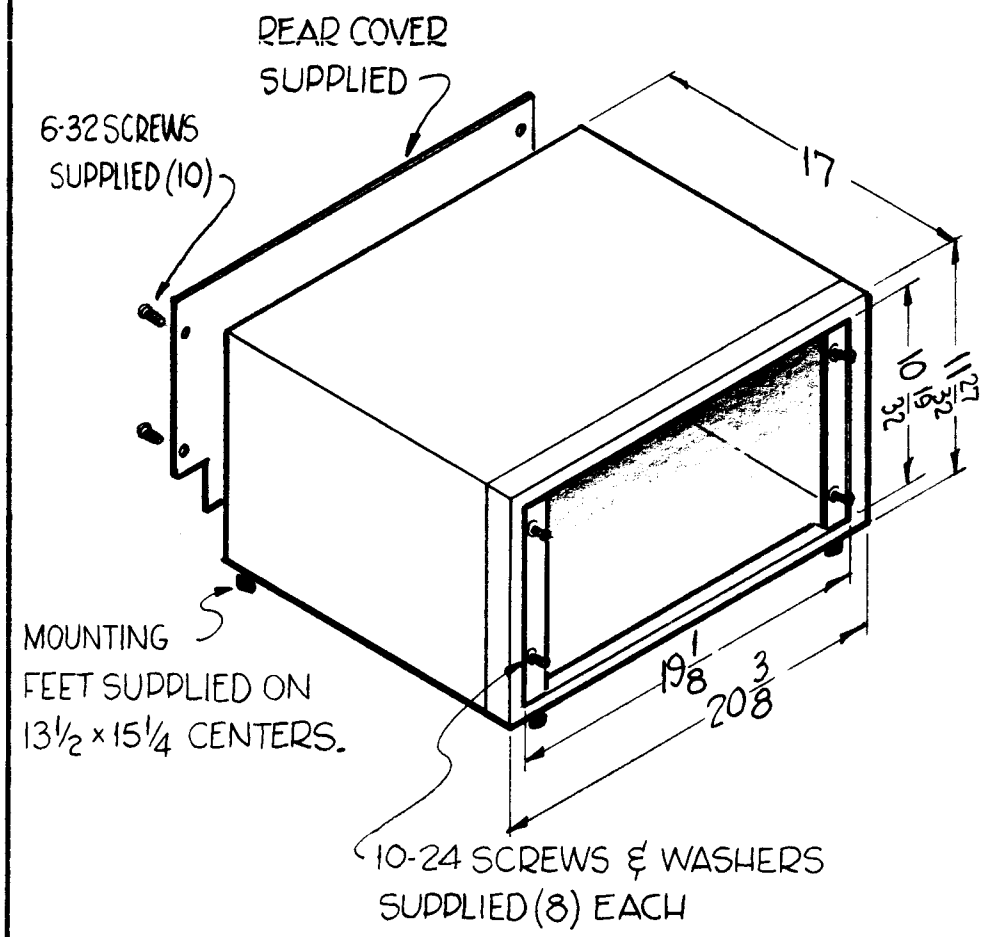

SYM	DESCRIPTION	DATE	CH. NO.	DRAFTS	CHECKER	ENG. APP.

REQ.	ITEM	PART NO.	DESCRIPTION	SYMBOL

STOCK SIZE

MATERIAL

TYPE & TEMPER | HEAT TREAT. SPEC.

FINISH & SPEC. NO.

THE TECHNICAL MATERIEL CORP.
MAMARONECK, NEW YORK

CABINET, ELECTRICAL, EQUIP.

DRAWN	CHECKED	FINAL APPROVAL
D. Dimon		

ELEC. DES. APP. | MECH. DES. APP.

CAB-3

UNLESS OTHERWISE SPECIFIED:
DIMENSIONS ARE IN INCHES
TOLERANCES ON
FRAC. ± 1/64 DEC. ± .005 ANGLES ± 1/2°

SCALE: A-2286

MAXIMUM ALLOWABLE TOLERANCES HAVE BEEN DETERMINED AND ANY DEVIATIONS WILL BE CAUSE FOR REJECTION.
REMOVE ALL BURRS AND SHARP EDGES

DEFIANCE NO. 1020