REVISIONS							
ZONE	LTR.	DESCRIPTION	DATE	E.M.N.NO	DRAFT	CHKD	APPD
	X	EXP RELEASE	3 3 69		OE	KP	
	Ø	ORIGINAL RELEASE FOR PRODUCTION	8/18/69	Ø	KP	[illegible]	
	A	ON ≡ NW176 WAS NW169	10/16/69	13815	EH	KP	[illegible]
	B	REPL. R[illegible] 1.6 OFF LINE	[illegible]	[illegible]	OE	KP	[illegible]
	C	ADD. CON. TO Q20	11/26/69	14113	KP	Ø	[illegible]

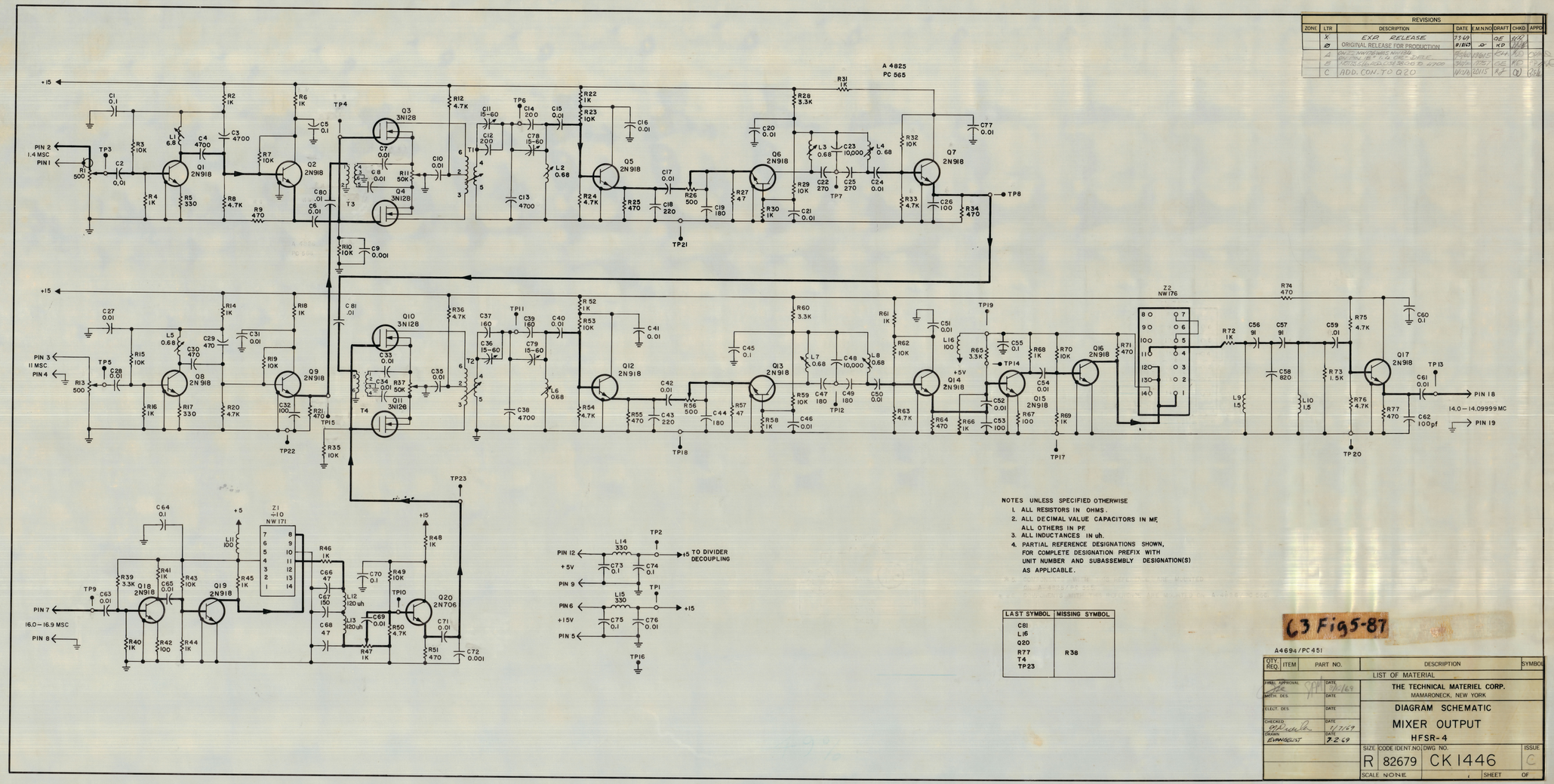

NOTES UNLESS SPECIFIED OTHERWISE

1. ALL RESISTORS IN OHMS.
2. ALL DECIMAL VALUE CAPACITORS IN MF, ALL OTHERS IN PF
3. ALL INDUCTANCES IN uh.
4. PARTIAL REFERENCE DESIGNATIONS SHOWN, FOR COMPLETE DESIGNATION PREFIX WITH UNIT NUMBER AND SUBASSEMBLY DESIGNATION(S) AS APPLICABLE.

LAST SYMBOL	MISSING SYMBOL
C81	
L16	
Q20	
R77	R38
T4	
TP23	

C3 Fig 5-87

A4694/PC451

QTY. REQ.	ITEM	PART NO.	DESCRIPTION	SYMBOL
			LIST OF MATERIAL	

FINAL APPROVAL [illegible] DATE 7/1/69
MECH. DES. DATE
ELECT. DES. DATE
CHECKED [illegible] DATE 11/7/69
DRAWN EVANGELIST DATE 7.2.69

THE TECHNICAL MATERIEL CORP.
MAMARONECK, NEW YORK

DIAGRAM SCHEMATIC
MIXER OUTPUT
HFSR-4

SIZE	CODE IDENT NO.	DWG. NO.	ISSUE
R	82679	CK 1446	C

SCALE NONE SHEET OF