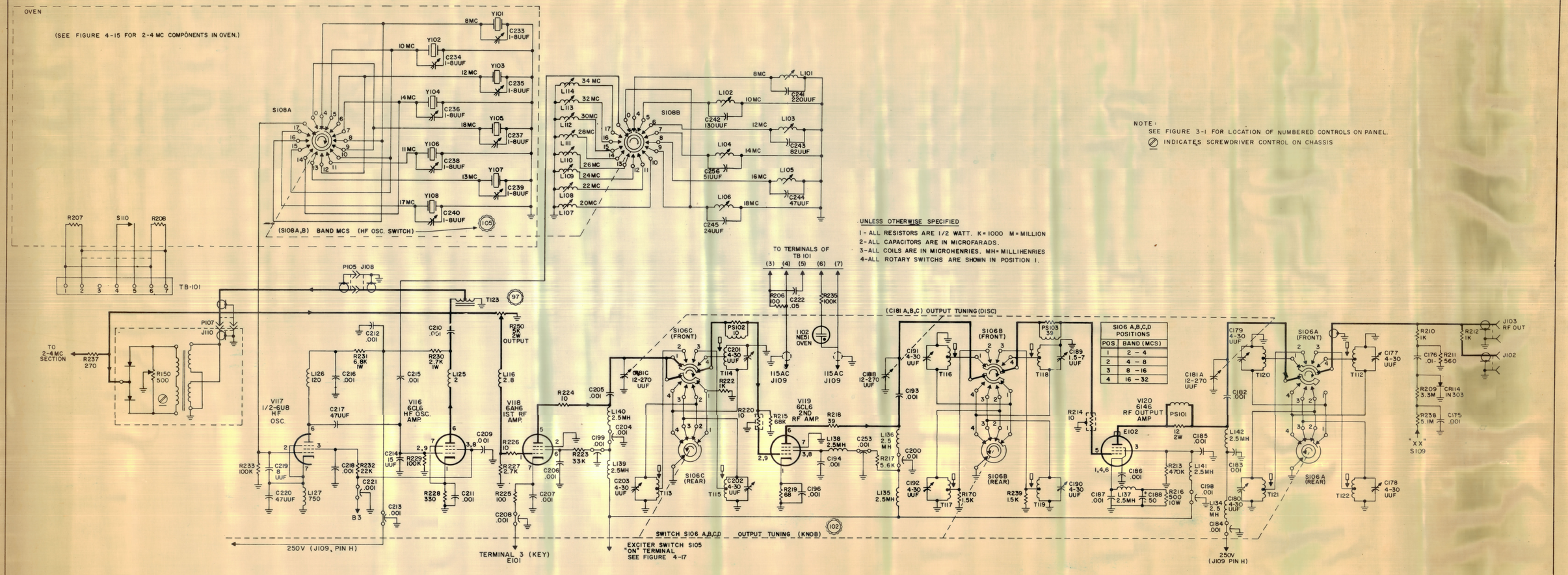
OVEN
(SEE FIGURE 4-15 FOR 2-4 MC COMPONENTS IN OVEN.)
S108A
S108B
(S108A,B) BAND MCS (HF OSC. SWITCH)
TB-101
TO 2-4MC SECTION
V117 1/2-6U8 HF OSC.
V116 6CL6 HF OSC. AMP.
V118 6AH6 1ST RF AMP.
V119 6CL6 2ND RF AMP.
V120 6146 RF OUTPUT AMP
S106C (FRONT)
S106C (REAR)
S106B (FRONT)
S106B (REAR)
S106A (FRONT)
S106A (REAR)
TO TERMINALS OF TB 101
(C181 A,B,C) OUTPUT TUNING (DISC)
SWITCH S106 A,B,C,D OUTPUT TUNING (KNOB)
250V (J109, PIN H)
TERMINAL 3 (KEY) E101
EXCITER SWITCH S105 "ON" TERMINAL SEE FIGURE 4-17
250V (J109 PIN H)
J103 RF OUT
J102
"XX" S109
NOTE:
SEE FIGURE 3-1 FOR LOCATION OF NUMBERED CONTROLS ON PANEL.
INDICATES SCREWDRIVER CONTROL ON CHASSIS
UNLESS OTHERWISE SPECIFIED
1- ALL RESISTORS ARE 1/2 WATT. K=1000 M=MILLION
2- ALL CAPACITORS ARE IN MICROFARADS.
3- ALL COILS ARE IN MICROHENRIES. MH=MILLIHENRIES
4- ALL ROTARY SWITCHS ARE SHOWN IN POSITION 1.
S106 A,B,C,D POSITIONS
POS. BAND (MCS)
1 2 - 4
2 4 - 8
3 8 - 16
4 16 - 32
THE TECHNICAL MATERIEL CORP.
SCHEM DIAG FIG.4-16 TRANS. MODE SELEC.
2-32 MC HF SECTION (SBE-3)
P.D. IORILLO
CK-430