REVISIONS

SYM	DESCRIPTION	DATE		DRAFT	CHKD	APPD
B	REDRAWN & REVISED	2-1-63	8100			
C	C5119, R5118 & R5119 ADDED, C5013 & C5050 RELOCATED. C5110 & C5111 VALUES WERE .05, R5109 & R5114 VALUES WERE 100. R5077 VALUE WAS 56K, 1 WATT; C5063 VALUE WAS 5uuf. ON Z5004: E5001, V5006 & V5005 WERE E5002, V5012 & V5011. ON Z5005: E5002, V5012 & V5011 WERE E5001, V5006 & V5005. SHIELDING CLARIFIED.	3-28-63	8665			
D	ON K5000 WIRING TO CONTACTS & CONTACT CONN CHG'D. WIRING CHG'D ON E5001 & E5002. ADDED NOTE # 4.	10/2/63	10072			
E	C5120 ADDED. IN LAST SYM. CHART C5120 WAS C5119.	11/26/63	10313			
F	Y5000 WAS 1.25MC, L5009 WAS 820 μh	3.24.64	11050			
G	C5063 WAS 10uuf, R5109 & R5114 WERE 10	6.23.64	11638	A.M.		
H	ON T5001 360 uuf was 390 uuf	7/14/65	14429			
J	C5121, 50 uf ADDED R5025 180K was 330K	9/1/65	14818			
K	MODEL NUMBER CHART ADDED	12/14/65	15420			
L	ON V5007 A & B, V5008 A & B "ECF82/6U8" WAS "6U8A"	1/17/66	15548	H.A.		
M	R5109 WAS 33Ω, R5114 WAS 33Ω, R5110 & R5111 WERE .1. ADD * SEE NOTE 4C	10/19/66	17070	RME		
N	C5122A & B, C5123A & B ADDED, SEE NOTE 4 ADDED: C5110 & C5111 WERE .0022	2.26.[illegible]	17746			

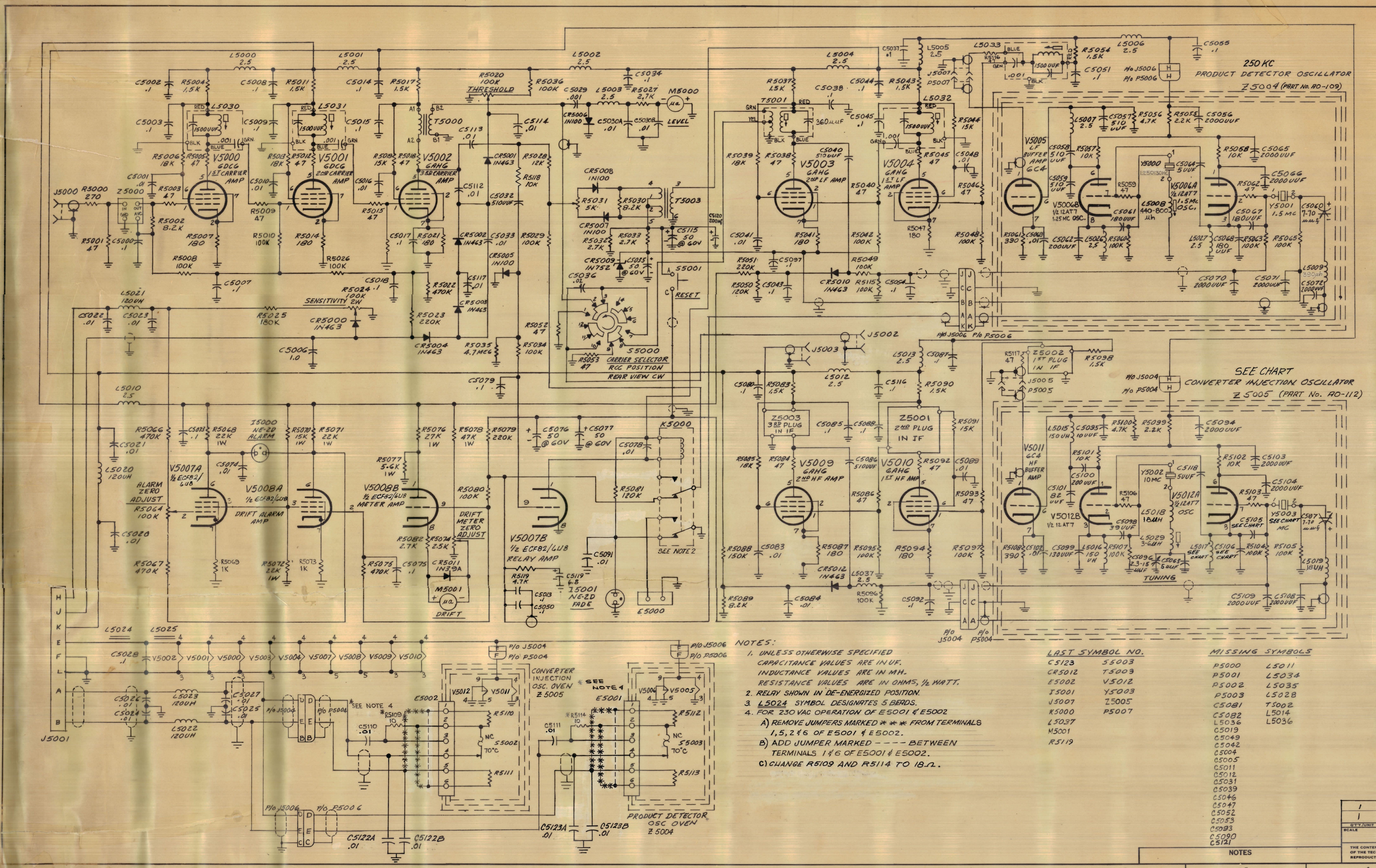

MODEL	VALUE OF				FREQ. OF
NUMBER	C5105	C5106	L5107	Y5003	Z5005
AFC-2A	22PF	82PF	150uh	10.705MC	705KC
AFC-8	20PF	51PF	100uh	10.350MC	350KC

NOTES:

1. UNLESS OTHERWISE SPECIFIED
   CAPACITANCE VALUES ARE IN UF.
   INDUCTANCE VALUES ARE IN MH.
   RESISTANCE VALUES ARE IN OHMS, 1/2 WATT.
2. RELAY SHOWN IN DE-ENERGIZED POSITION.
3. L5024 SYMBOL DESIGNATES 5 BEADS.
4. FOR 230 VAC OPERATION OF E5001 & E5002
   A) REMOVE JUMPERS MARKED * * * FROM TERMINALS 1, 5, 2 & 6 OF E5001 & E5002.
   B) ADD JUMPER MARKED - - - - BETWEEN TERMINALS 1 & 6 OF E5001 & E5002.
   C) CHANGE R5109 AND R5114 TO 18Ω.

LAST SYMBOL NO.	
C5123	S5003
CR5012	T5003
E5002	V5012
I5001	Y5003
J5007	Z5005
K5000	P5007
L5037	
M5001	
R5119	

MISSING SYMBOLS	
P5000	L5011
P5001	L5034
P5002	L5035
P5003	L5028
C5081	T5002
C5082	L5014
L5036	L5036
C5019	
C5049	
C5042	
C5004	
C5005	
C5011	
C5012	
C5031	
C5039	
C5046	
C5047	
C5052	
C5053	
C5093	
C5090	
C5121	

NOTES

QT'Y/UNIT	MODEL USED ON	ASS'Y. NO.
1	AFC-8	
1	AFC-2A	

THE CONTENTS OF THIS DRAWING ARE THE EXCLUSIVE PROPERTY OF THE TECHNICAL MATERIEL CORP. ITS UNAUTHORIZED USE OR REPRODUCTION IN WHOLE OR IN PART IS STRICTLY FORBIDDEN.

UNLESS OTHERWISE SPECIFIED DIMENSIONS ARE IN INCHES AND INCLUDE CHEMICALLY APPLIED OR PLATED FINISHES

TOLERANCES: DECIMALS .X ± .05, .XX ± .01, .XXX ± .005; FRACTIONS ± 1/64; ANGLES ± 0° 30'

LIST OF MATERIAL

THE TECHNICAL MATERIEL CORP.
MAMARONECK, NEW YORK

TITLE: DIAGRAM SCHEMATIC AFC-2A

DRAWN: W.S.

SHEET: CK-594

REV. LTR.: N