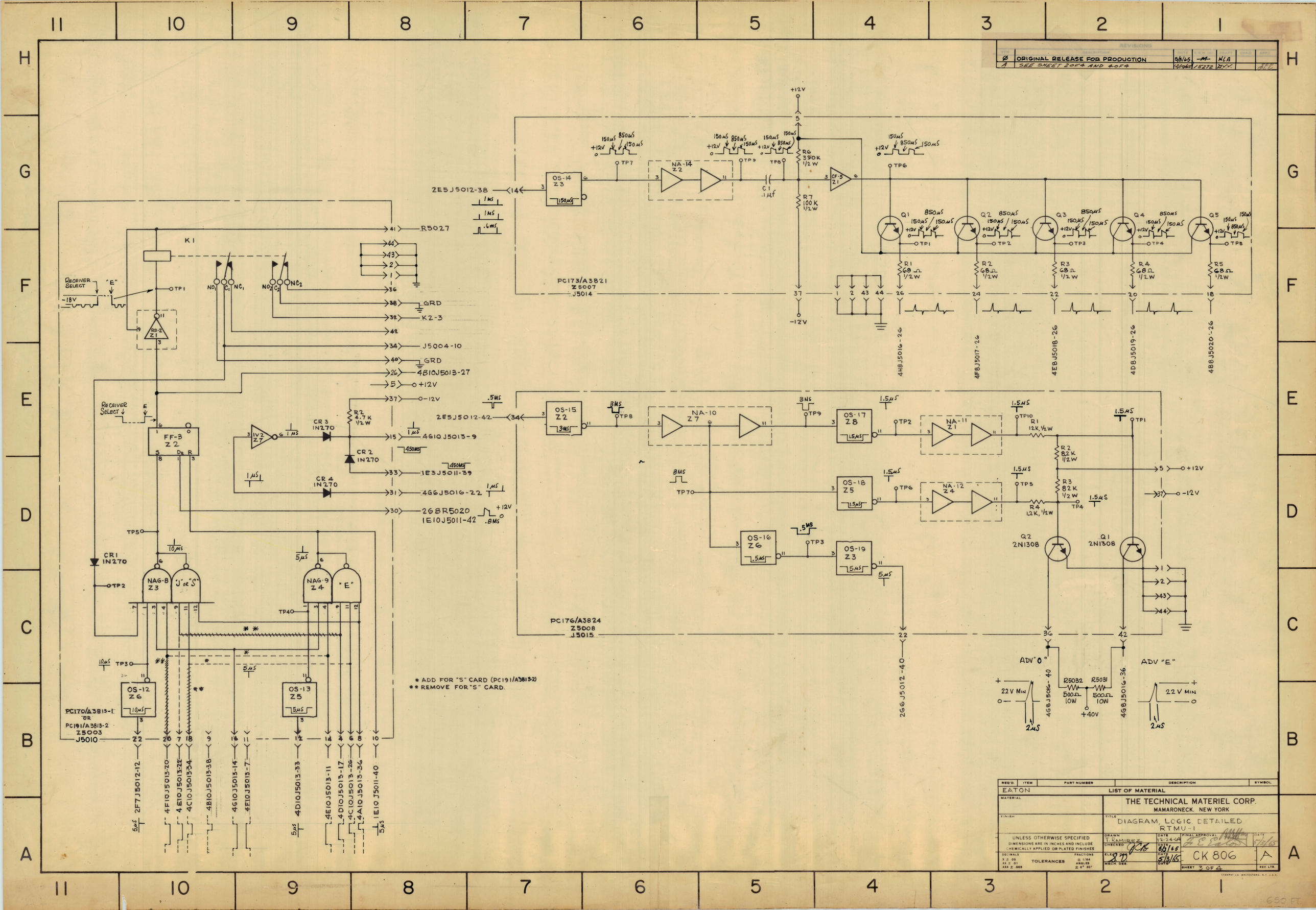

REVISIONS
Ø ORIGINAL RELEASE FOR PRODUCTION 5/3/65 NLA
A SEE SHEET 2 OF 4 AND 4 OF 4 12/10/65 15272 N.V.
PC173/A3821 Z5007 J5014
PC176/A3824 Z5008 J5015
PC170/A3813-1 OR PC191/A3813-2 Z5003 J5010
* ADD FOR "S" CARD (PC191/A3813-2)
** REMOVE FOR "S" CARD.
ADV "O"
ADV "E"
22 V MIN
EATON
LIST OF MATERIAL
THE TECHNICAL MATERIEL CORP.
MAMARONECK, NEW YORK
DIAGRAM, LOGIC DETAILED RTMU-1
UNLESS OTHERWISE SPECIFIED DIMENSIONS ARE IN INCHES AND INCLUDE CHEMICALLY APPLIED OR PLATED FINISHES
TOLERANCES
DRAWN T. RAMIREZ 12-24-64
CHECKED 8/3/65
ELEC. DES. 5/3/65
MECH. DES.
FINAL APPROVAL 5/3/65
CK 806 A
SHEET 3 OF 4