REQ. PER UNIT	USED ON			ES FX 5500
	MODEL	ASS'Y. NO.	DATE	
			8/19/63	

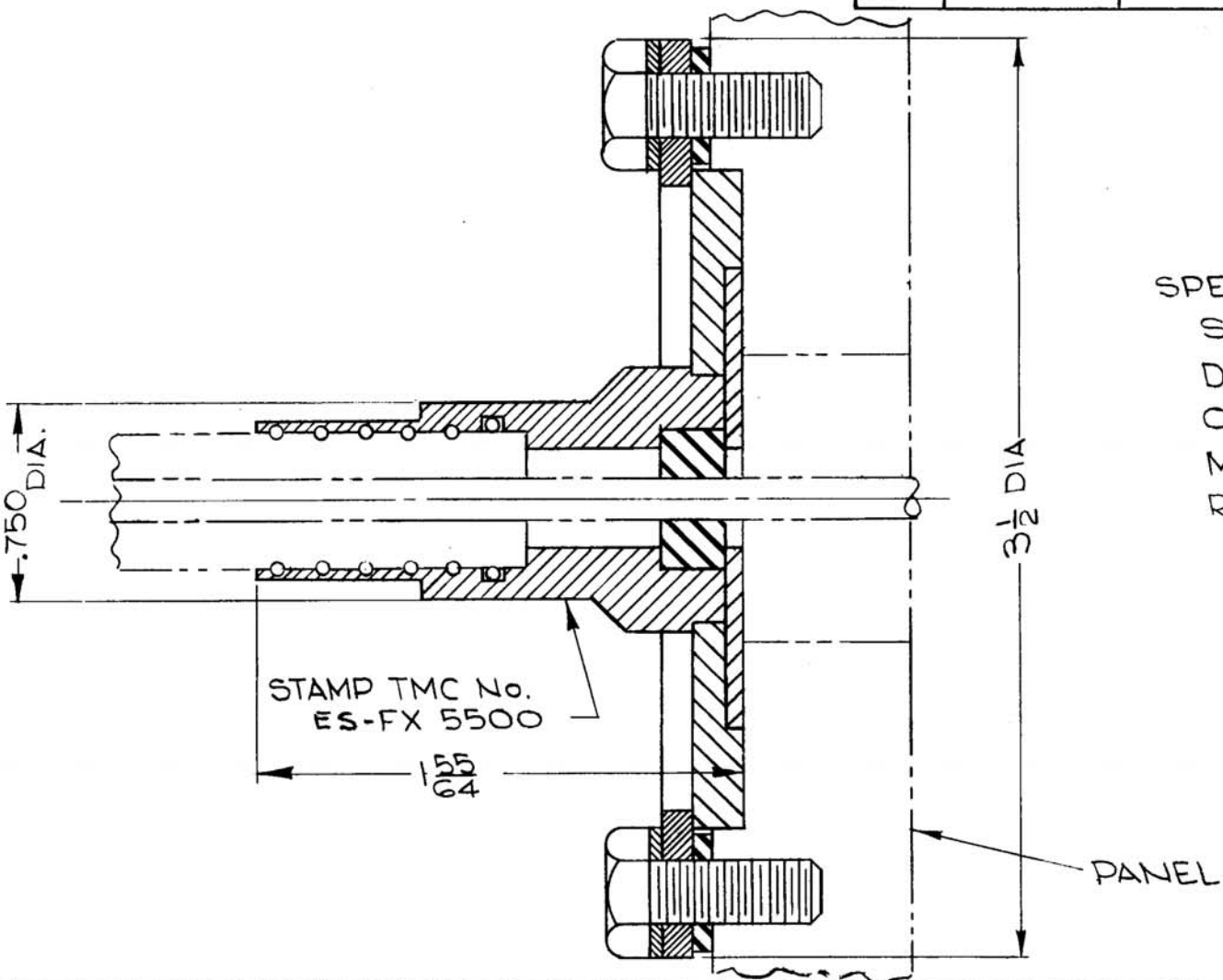

SPECIFICATIONS
SERIES: FOAMFLEX
DIELECTRIC: TEFLON
CABLE: FOR USE W/ 1/2-50Ω FX
MOUNTING: PANEL
REMARKS: WIRELOCK

SYM	DESCRIPTION	DATE	CH. NO.	DRAFTS	CHECKER	ENG. APP.

UNLESS OTHERWISE SPECIFIED
DIMENSIONS ARE IN INCHES AND INCLUDE
CHEMICALLY APPLIED OR PLATED FINISHES

DECIMALS .X ±.05 .XX ± .01 .XXX ±.005 — TOLERANCES — FRACTIONS ± 1/64 ANGLES ± 0° 30′

SCALE: NOT TO SCALE

CODE: S401-70 (2942)

REQ.	ITEM	PART NO.	DESCRIPTION	SYMBOL
			MARTINENGO	

STOCK SIZE: ~

MATERIAL: ~

TYPE & TEMPER: ~ HEAT TREAT. SPEC.: ~

FINISH & SPEC. NO.: ~

THE TECHNICAL MATERIEL CORP.
MAMARONECK. NEW YORK

CONNECTOR, BOX

DRAWN: R Chimanth 8-19-63 CHECKED: 8/20/63 FINAL APPROVAL: BP

ELEC. DES. APP. MECH. DES. APP.

ES-FX 5500

TMC FORM 108-A STOCK NO. 440H