REVISIONS							
ZONE	LTR	DESCRIPTION	DATE	E.M.N.NO	DRAFT	CHKD	APPD
	Ø	ORIG RELEASE FOR PROD	4-11-69		CV		

FINISH:
BODY: BRASS HOT TINNED CENTRIFUGED
ALL SHAFTS: STAINLESS STEEL
COVER BRASS - N.P.
HARDWARE - BRASS N. P.
SOCKET HEAD SET SCREWS CAD. PLATED
GEARS BRASS N.P.

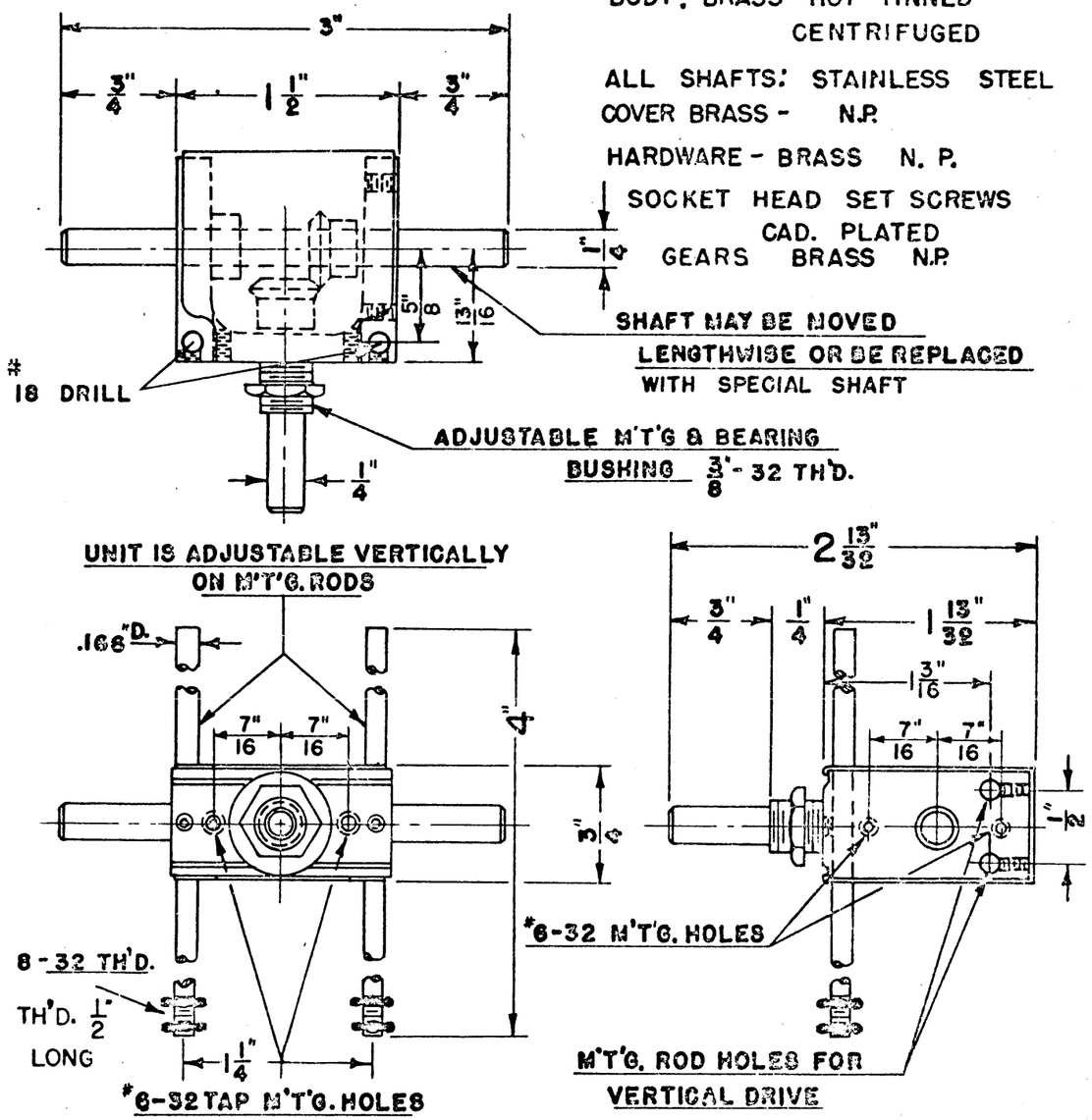

REQ'D	ITEM	PART NUMBER	DESCRIPTION	SYM.

LIST OF MATERIAL

QTY / UNIT	MODEL USED ON	ASS'Y NO.
2	SPT3K/VHF	AX 8081
2		AX 8080

APPLICATION

CODE S401-101(10012)

UNLESS OTHERWISE SPECIFIED DIMENSIONS ARE IN INCHES AND INCLUDE CHEMICALLY APPLIED OR PLATED FINISHES

DECIMALS	TOLS.	FRACTIONS
.X ± .05		1/64
.XX ± .01		ANGLES
.XXX ± .005		0° .30'

MATERIAL

FINISH

		DATE
FINAL APPROVAL		4-11-69
MECH. DES.		4-11-69
ELECT. DES.		DATE
CHECKED		4-11-69
DRAWN	CV	4-11-69

THE TECHNICAL MATERIEL CORP.
MAMARONECK, NEW YORK

RIGHT ANGLE DRIVE

SIZE	CODE IDENT. NO.	DWG NO.	ISSUE
B	82679	GR 8002	Ø

SCALE SHEET OF

NOTICE TO PERSONS RECEIVING THIS DRAWING
THE TECHNICAL MATERIEL CORPORATION claims proprietary right in the material disclosed hereon. This drawing is issued in confidence for engineering information only and may not be reproduced or used to manufacture anything shown hereon without permission from **THE TECHNICAL MATERIEL CORPORATION** to the user. This drawing is loaned for mutual assistance and is subject to recall at any time.

FCI-10-170 (10-66)