IF IT IS FOUND DESIRABLE TO CHANGE ANY TOLERANCE OR OTHER DETAIL SPECIFIED ON THIS DRAWING NOTIFY THE PURCHASER PROMPTLY.

MAXIMUM ALLOWABLE TOLERANCES HAVE BEEN DETERMINED AND DEVIATIONS WILL BE CAUSE FOR REJECTION. REMOVE ALL BURRS AND SHARP EDGES

LS-101 F

SPECIFICATIONS

1~ MAGNET TYPE - DP ALNICO 5

2~ VOICE COIL SPECS:

A~ IMPEDANCE: 3.4 Ω (OHMS)

B~ POWER: 4 WATTS PROG.

C~ DIAMETER: 9/16"

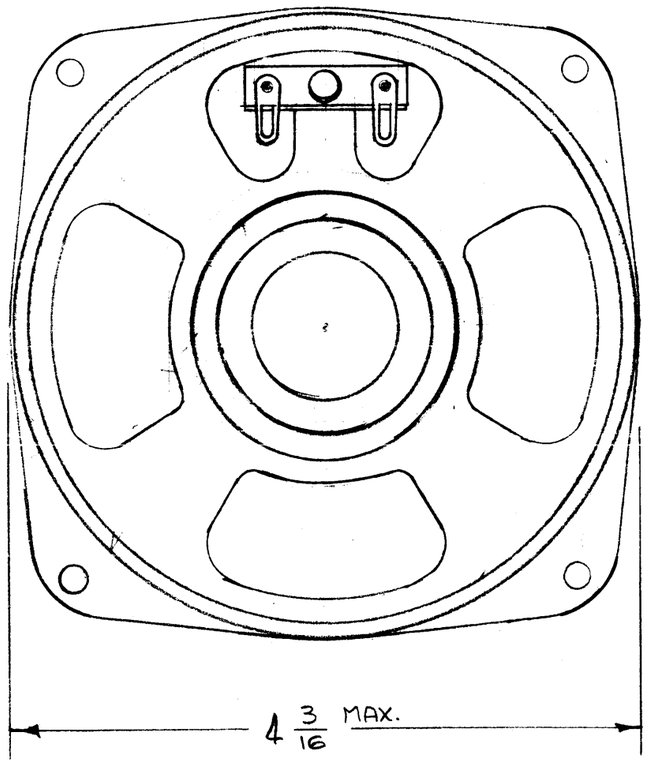

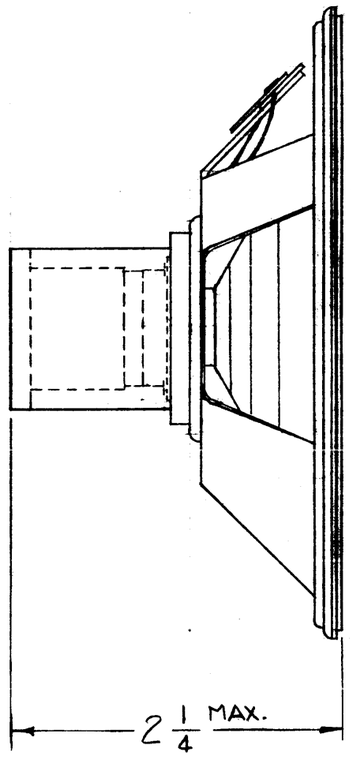

~DRILLING PLAN~

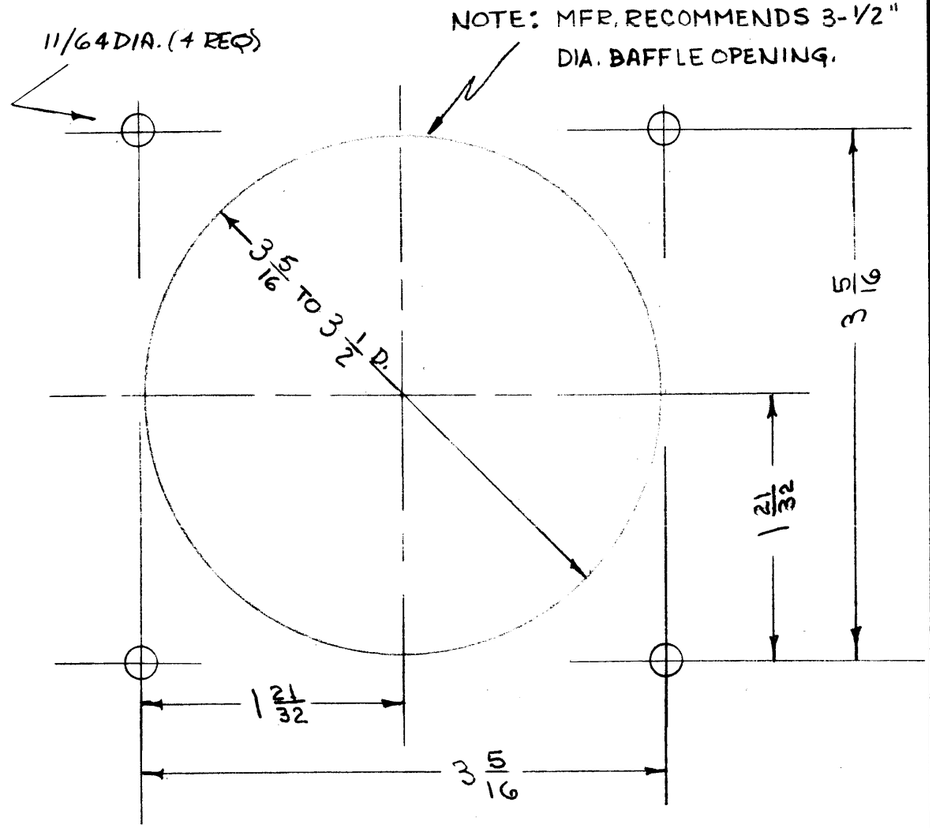

REF: UTAH MFG. CO. PART # $P4Y

ISSUE	ITEM	CHANGED FROM	DATE	CN. NO.	DRAFTS	CHECKER	ENG. APP.
F		IMP. WAS 3.2 Ω, POWER WAS 4.5 W. REF WAS JENSEN MFG	1-4-75	21185	G.D.L	CL	CL
E		PART # WAS P4W	6-22-72	20754	GE	EL	EL
D	1	COMPLETEY REVISED	11-26-62	7710	[illegible]	[illegible]	[illegible]
C	1	PART # WAS P4X-ST113	8-19-60	2756	RU	JCB	[illegible]
B	2 1	3 5/16 WAS 3 5/8 11/64 " 7/32 2" WAS 2 1/4	10/28/54	2	CDD	MHS	[illegible]
A	1	REDRAWN - DRILLING PLAN ADDED	1/18/54	14	C.D.D.	[illegible]	[illegible]

TOLERANCES

SCALE: //

ALL OTHERS: DEC. DIM. ±; FRAC. DIM. ± 1/64; ANGULAR DIM. ±

DRILL, PUNCH, COMMERCIAL STOCK SIZES AND MANUFACTURERS TOLERANCES ARE NOT INCLUDED.

NOTICE TO PERSONS RECEIVING THIS DRAWING

THE TECHNICAL MATERIEL CORPORATION claims proprietary right in the material disclosed hereon. This drawing is issued in confidence for engineering information only and may not be reproduced or used to manufacture anything shown hereon without permission from THE TECHNICAL MATERIEL CORPORATION to the user. This drawing is loaned for mutual assistance and is subject to recall at any time.

Property of:

THE TECHNICAL MATERIEL CORPORATION
MAMARONECK, NEW YORK

MODEL	PROJECT NO.	ASS'Y. NO.	DATE
LSP-1	202		1-18-54

USED ON

REQ.	ITEM	PART NO.	DESCRIPTION	SYMBOL
		//	THE TECHNICAL MATERIEL CORP. MAMARONECK. NEW YORK	
		STOCK SIZE	SPEAKER, P.M.	
		// MATERIAL / // WEIGHT PER PC.		
		// TYPE & TEMPER	C.D.D. 1-18-54 DRAWN / A. J. J. ELEC. DES. APP. / MECH. DES. APP.	
		// HEAT TREAT. SPEC.	[illegible] CHECKED / A. J. J. FINAL APPROVAL	
		// FINISH & SPEC. NO.	LS-101	F