NOTICE TO PERSONS RECEIVING THIS DRAWING

THE TECHNICAL MATERIEL CORPORATION claims proprietary right in the material disclosed hereon. This drawing is issued in confidence for engineering information only and may not be reproduced or used to manufacture anything shown hereon without permission from THE TECHNICAL MATERIEL CORPORATION to the user. This drawing is loaned for mutual assistance and is subject to recall at any time.

Property of:
THE TECHNICAL MATERIEL CORPORATION
MAMARONECK, NEW YORK

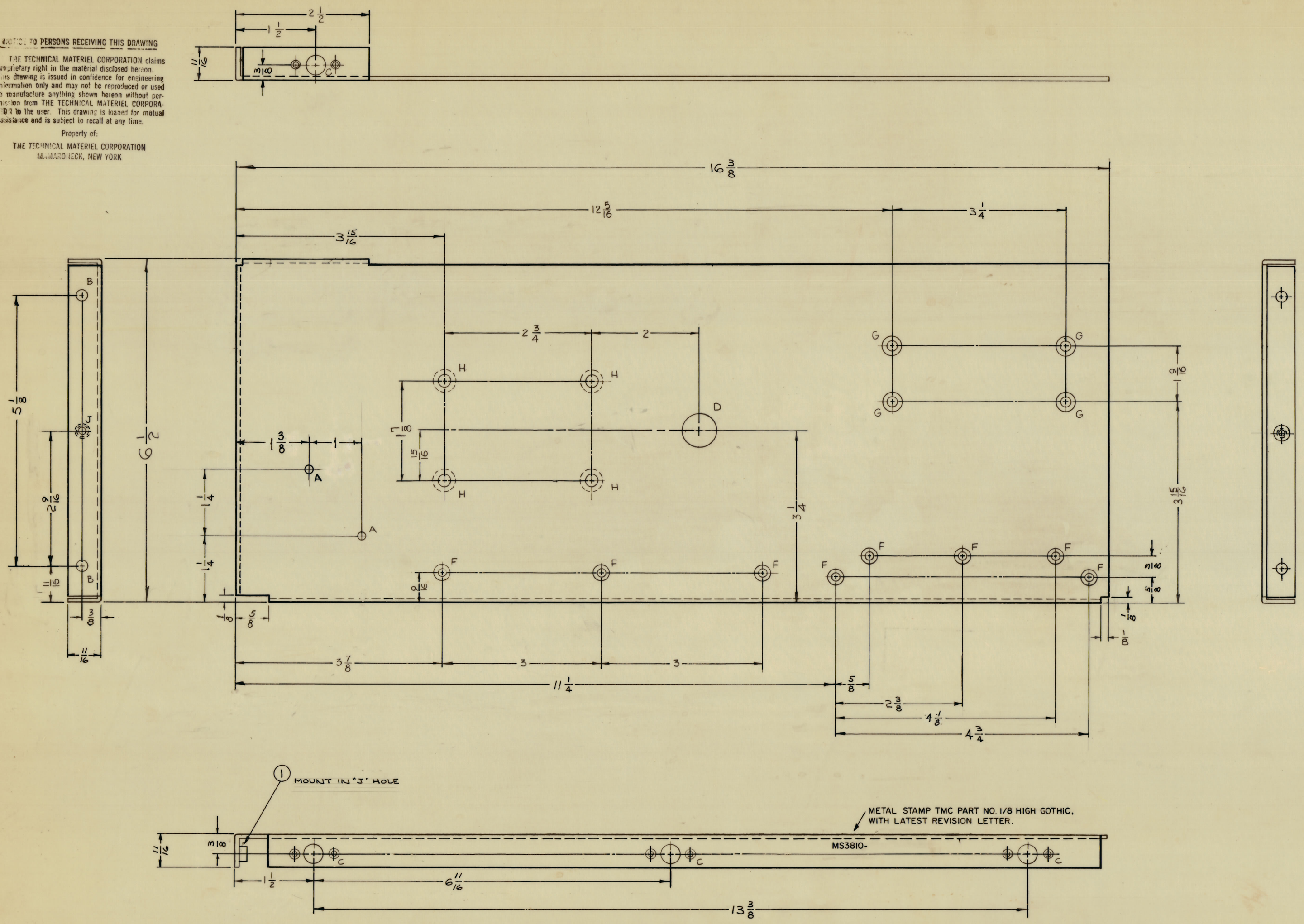

HOLES

A - 5/32 DIA.	2 REQ.
B - 7/32 DIA.	2 REQ.
C - SEE DETAIL	4 REQ.
D - 3/4 DIA.	1 REQ.
E, F, G, H - P/O DETAIL "C" SEE COUNTERSINK DETAIL.	
J - .191-.194 DIA	1 REQ

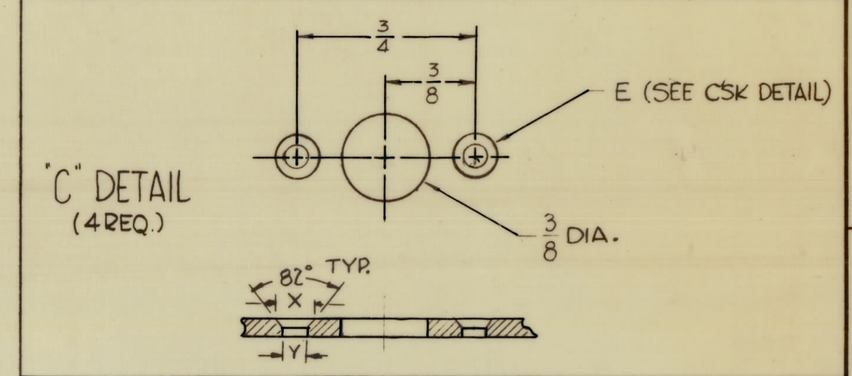

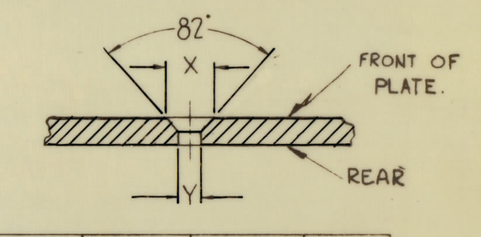

HOLE	"X"	"Y"	REQ.
E	.204	.104	8
F	.284	.144	
G	.337	.169	4
H	.390	.196	4

C'SINK FROM REAR

COUNTERSINK DETAIL

UNLESS OTHERWISE SPECIFIED:

1. USE MATERIAL THICKNESS FOR MAXIMUM RADIUS ON ALL BENDS.
2. ALL ANGULAR BENDS 90°.
3. REMOVE ALL BURRS AND SHARP EDGES.
4. MOUNT INSERTS AFTER FINISHING.

MS3810

REQ.	ITEM	PART NO.	DESCRIPTION	SYMBOL
1	1	NT129-632-4	NUT, ROUND, SWAGE TYPE	J

STOCK SIZE: .081 THK

MATERIAL: ALUMINUM

TYPE & TEMPER: 5052-H32 — HEAT TREAT. SPEC.: —

FINISH & SPEC. NO.: S404, YELLOW IRIDITE

THE TECHNICAL MATERIEL CORP.
MAMARONECK, NEW YORK

PLATE, SIDE – RIGHT

DRAWN: G. Sussman — CHECKED: [signature] — FINAL APPROVAL: [signature] 11/30/65

ELEC. DES. APP.: [signature] — MECH. DES. APP.: [signature] — SHEET OF: MS3810

REQ. PER UNIT	MODEL	SECTION	ASS'Y. NO.	DATE
1	SBS-7		A2877	5-14-64

USED ON

SYM	ZONE	DESCRIPTION	DATE	CH. NO.	DRAFTS	CHECKER	ENG. APP.
Ø		ORIGINAL RELEASE FOR PRODUCTION	11/1/65				
X1	—	(09) 1-3/8 WAS 1, 1 WAS 3/8 (5C) 4 1/8 WAS 3-3/4	9.8.65	2	[signature]	[signature]	
X	—	EXPER. RELEASE	5.14.64	1	[signature]		

UNLESS OTHERWISE SPECIFIED:
DIMENSIONS ARE IN INCHES
TOLERANCES ON
FRACTIONS ± 1/64 DECIMALS ± .005 ANGLES ± 1/2°

A

SCALE 1:1

MAXIMUM ALLOWABLE TOLERANCES HAVE BEEN DETERMINED AND ANY DEVIATIONS WILL BE CAUSE FOR REJECTION.
REMOVE ALL BURRS & SHARP EDGES

TMC FORM NO. 111

DEFIANCE NO. 1020