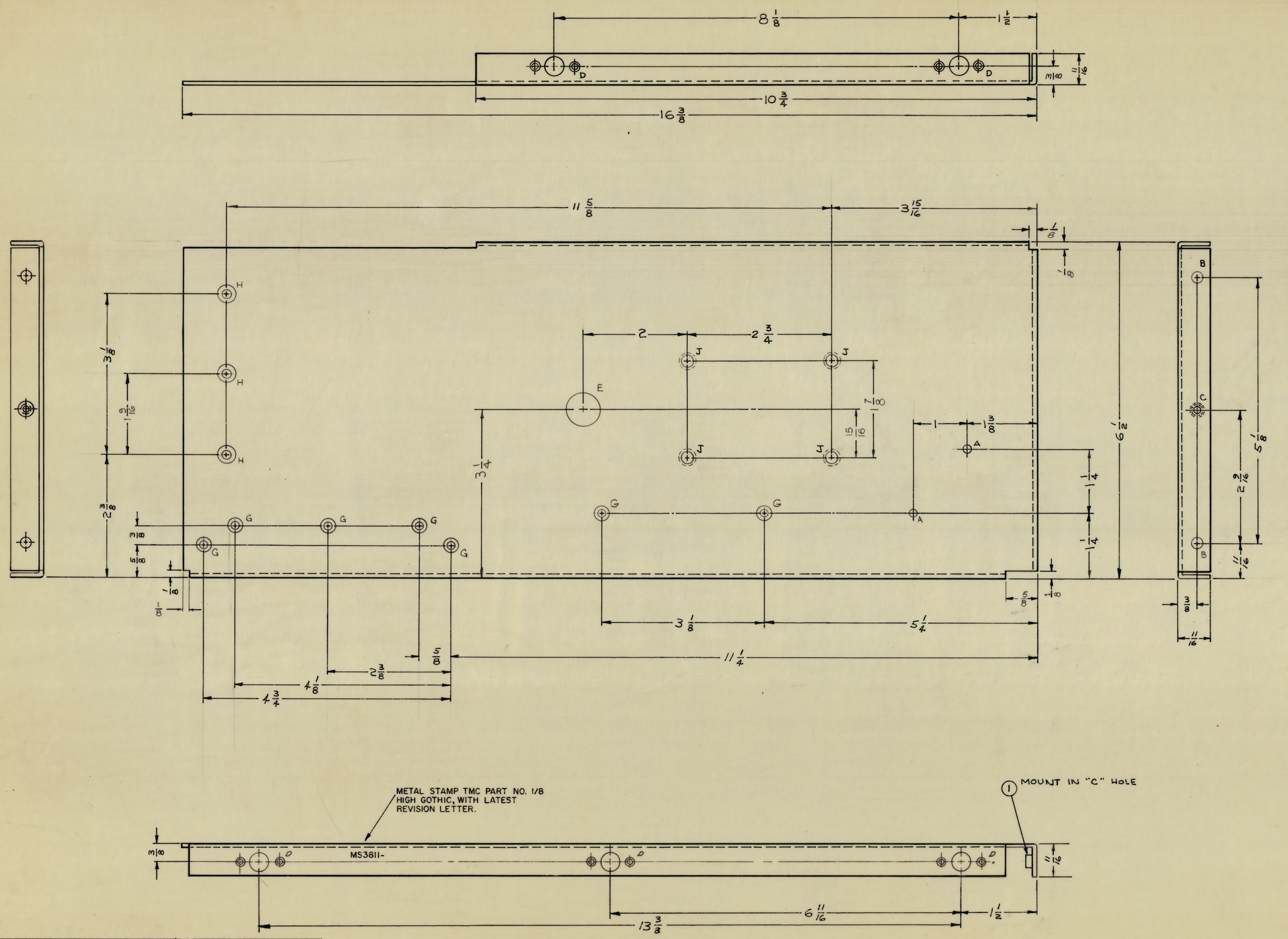

HOLES -

A - 5/32 DIA.	2 REQ.
B - 7/32 DIA.	2 REQ.
C - .191 - .194 DIA.	1 REQ.
D - SEE DETAIL	5 REQ.
E - 3/4 DIA.	1 REQ.
F, G, H - P/O DETAIL "D" SEE COUNTERSINK DETAIL	
J - SEE COUNTERSINK DETAIL	

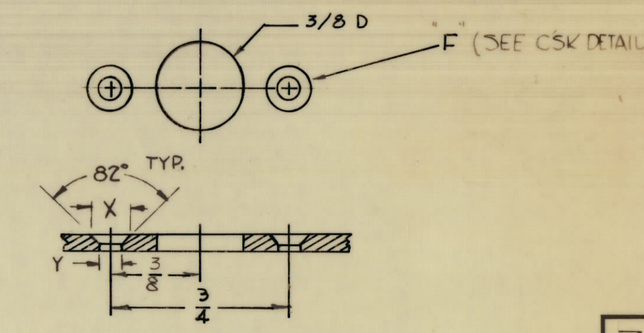

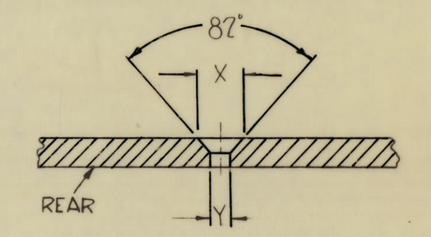

HOLE	"X"	"Y"	REQ.
F	.204	.104	10
G	.284	.144	7
H	.337	.169	3
J	.390	.196	4

C'SINK FROM REAR

— COUNTERSINK DETAIL —

UNLESS OTHERWISE SPECIFIED:

1. USE MATERIAL THICKNESS FOR MAXIMUM RADIUS ON ALL BENDS.
2. ALL ANGULAR BENDS 90°.
3. REMOVE ALL BURRS AND SHARP EDGES.
4. MOUNT INSERTS AFTER FINISHING.

MS3811

REQ.	ITEM	PART NO.	DESCRIPTION	SYMBOL
1	1	NT129-632-4	NUT, ROUND, SWAGE TYPE	C

O. POSE

THE TECHNICAL MATERIEL CORP.
MAMARONECK, NEW YORK

PLATE, SIDE - LEFT

SYM	ZONE	DESCRIPTION	DATE	CH. NO.	DRAFTS	CHECKER	ENG. APP.
Ø		ORIGINAL RELEASE FOR PRODUCTION	11/1/65				
X1	F7	11-5/8 DIM. WAS 9-5/8	9-8-65	2			
X	→	EXPER. RELEASE	5-15-64	1			

UNLESS OTHERWISE SPECIFIED:
DIMENSIONS ARE IN INCHES
TOLERANCES ON
FRACTIONS ± 1/64 DECIMALS ± .005 ANGLES ± 1/2°

A

SCALE 1:1

MAXIMUM ALLOWABLE TOLERANCES HAVE BEEN DETERMINED AND ANY DEVIATIONS WILL BE CAUSE FOR REJECTION.
REMOVE ALL BURRS & SHARP EDGES

REQ. PER UNIT	MODEL	SECTION	ASS'Y. NO.	DATE
1	SBS-7		A2876	5-15-64

USED ON

STOCK SIZE	.081 THK
MATERIAL	ALUMINUM
TYPE & TEMPER	5052-H32
HEAT TREAT. SPEC.	—4—
FINISH & SPEC. NO.	S404 - YELLOW IRIDITE

DRAWN: G. Sweeney — CHECKED: [signature] — FINAL APPROVAL: [signature] 10/20/65

ELEC. DES. APP. — MECH. DES. APP. — SHEET OF — MS3811 — Ø

TMC FORM NO. 111

DEFIANCE NO. 1020