| REQ. PER UNIT | USED ON MODEL | ASS'Y. NO. | DATE | PL 245 | Ø |
|---|---|---|---|---|---|
| | | | | | |

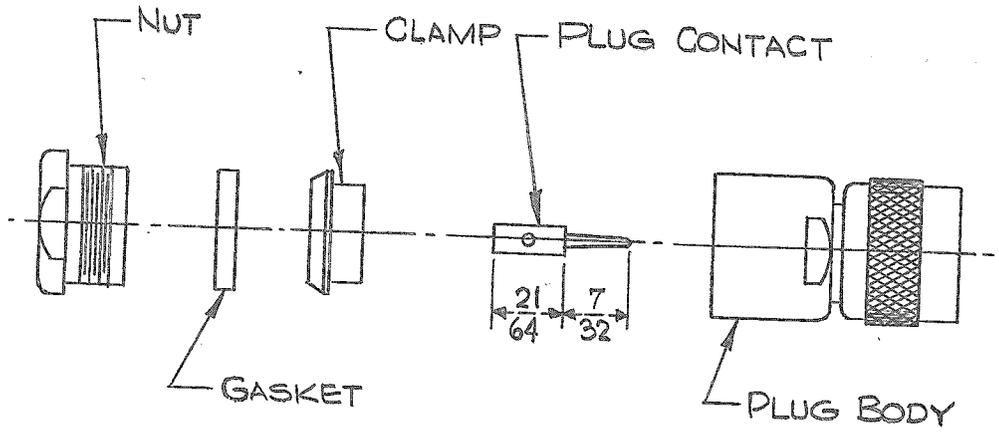


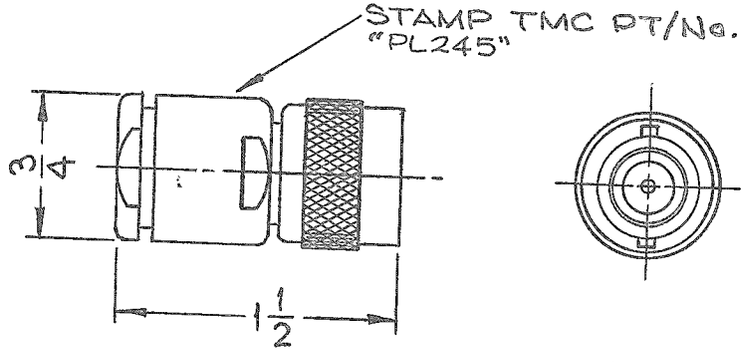


## SPECIFICATIONS

SERIES : "C"
NO. OF CONTACTS : ONE (1)
TYPE OF CONTACT : MALE
DIELECTRIC : TEFLON

**ELECTRICAL DATA :**
MAX. PEAK OPR. VOLT : 1.500 V
FREQ. LIMIT : 10,000 MHz
NOMINAL IMPEDANCE : CONSTANT FOR 50 OHMS

**CABLE ACCOMODATIONS:**
TYPE : RG-8/U , RG-9/U

**MATERIAL :**
EXTERNAL PARTS: BRASS
CONTACT : BERYLLIUM COPPER
GASKET : SILICONE

**FINISH :**
EXTERNAL PARTS : SILVER PLATE, RHODIUM FLASH.
CONTACT : SILVER PLATE, GOLD FLASH

**MATING CONNECTOR :** JJ 309
(FOR STANDARD "C" SERIES USE UG 573/U)

| SYM | DESCRIPTION | DATE | CH. NO. | DRAFTS | CHECKER | ENG. APP. |
|---|---|---|---|---|---|---|
| Ø | ORIGINAL RELEASE | 8/26/69 | | CW | | |
| X2 | SPEC & ELECT. DATA UPDATED | 9-20-67 | | ENJ | [illegible] | [illegible] |
| X1 | "PT/No Note added | 2.20.67 | — | WAW | | |

UNLESS OTHERWISE SPECIFIED DIMENSIONS ARE IN INCHES AND INCLUDE CHEMICALLY APPLIED OR PLATED FINISHES

TOLERANCES: DECIMALS .X ±.05, .XX ± .01, .XXX ±.005; FRACTIONS ± 1/64; ANGLES ± 0° 30'

SCALE —

CODE C

S401-70( )

| REQ. | ITEM | PART NO. | MARTINENGO DESCRIPTION | SYMBOL |
|---|---|---|---|---|
| | | — | | |

STOCK SIZE: SEE SPECS.

MATERIAL: — / —

TYPE & TEMPER / HEAT TREAT. SPEC.

SEE SPECS.

FINISH & SPEC. NO.

THE TECHNICAL MATERIEL CORP.
MAMARONECK, NEW YORK

PLUG, CONNECTOR
"C" SERIES SPECIAL

DRAWN: 3.23.66 H. AUSTIN
CHECKED:
FINAL APPROVAL: [illegible] 8/26/69
ELEC. DES. APP.:
MECH. DES. APP.:

PL 245 Ø

TMC FORM 108-A

REPROVEL NO. 440H 23845