DESG.	DIMENSION	TOL.	REMARK
A	1 1/2	±.015	SHAFT LG. FROM MTG. SURFACE
B	3/8	±.005	BUSH. LG.
C	NA	±.015	FLAT LG. (IF REQ.)
D	NA	±2°	FLAT ANGLE (IF REQ.)
E	NA	±.002	FLAT (IF REQUIRED)
F	17/32	±.010	KEY LOCATION (IF REQ.)
G	0°		KEY LOCATION (IF REQ.)
M	0	±.010	
N	1/16	±.093	REAR SCR. EXT.
Q	1/16	±.031	REAR SHAFT EXT.
R	3/8		1st SEC. SPACING

TMC PART NUMBER: SW-576 STAMP ON FRONT PLATE
FRONT PLATE SHAPE: ROUND ____ OR OBLONG X

MECHANICAL SPECIFICATIONS:
NUMBER OF SECTIONS- 1
NUMBER OF POSITIONS- 12
ANGLE OF THROW- ____

CONTACTS:
SHORTING TYPE, SECTIONS X
NON SHORTING TYPE, SECTIONS ____
SILVER PLATED BRASS, SECTIONS 1
SILVER ALLOY, SECTIONS ____

WAFERS:
BAKELITE, SECTIONS 1
CERAMIC, SECTIONS ____
MYCALEX, SECTIONS ____
IMPREGNATION (IF REQ.) ____

FINISH REQUIREMENTS:
ARMY ____ NAVY ____ COMMERCIAL X
SALT TEST (IF REQ.)

HARDWARE, TO BE SUPPLIED BY MANUFACTURER:
1 QUAN. 3/8 -32 NUTS 9/16 ACROSS FLATS
MATERIAL BRASS PLATING CADMIUM
1 QUAN. 3/8 INTERNAL TOOTH LOCKWASHER
MATERIAL STEEL PLATING CADMIUM

ELECTRICAL SPECIFICATIONS:
MAXIMUM RATED VOLTAGE 110VAC
MAXIMUM RATED CURRENT 1.0 AMP BREAK
5.0 AMP CARRY

NOTE:
FOR S401-13 ("F" TYPE) SWITCHES, THE SHAFT POSITION MUST BE SPECIFIED ON DETAIL "XX" BELOW.

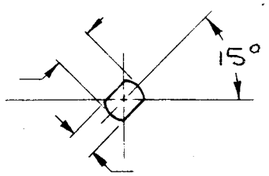

— DETAIL "XX" —

NOTES

REVISIONS

ZONE	LTR	DESCRIPTION	DATE	E.M.N.NO	DRAFT	CHKD	APPD
	Ø	ORIGINAL RELEASE	1-7-80	74	MAC		SD

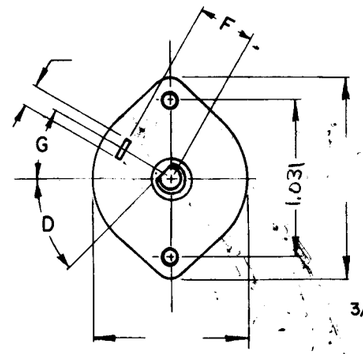

NOTE: OBLONG TYPE FRONT PLATE SHOWN, (SEE MECHANICAL SPECIFICATION)

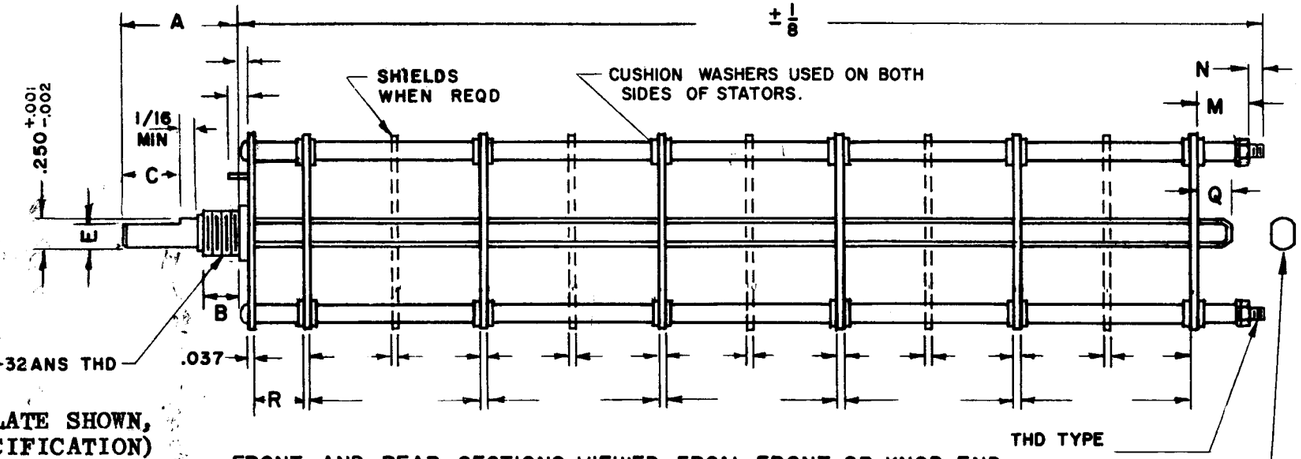

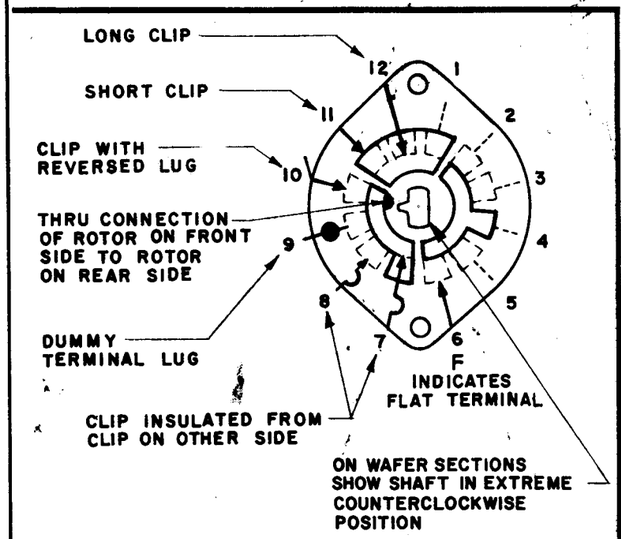

FRONT AND REAR SECTIONS VIEWED FROM FRONT OR KNOB END OF SWITCH IN EXTREME COUNTERCLOCKWISE POSITION.

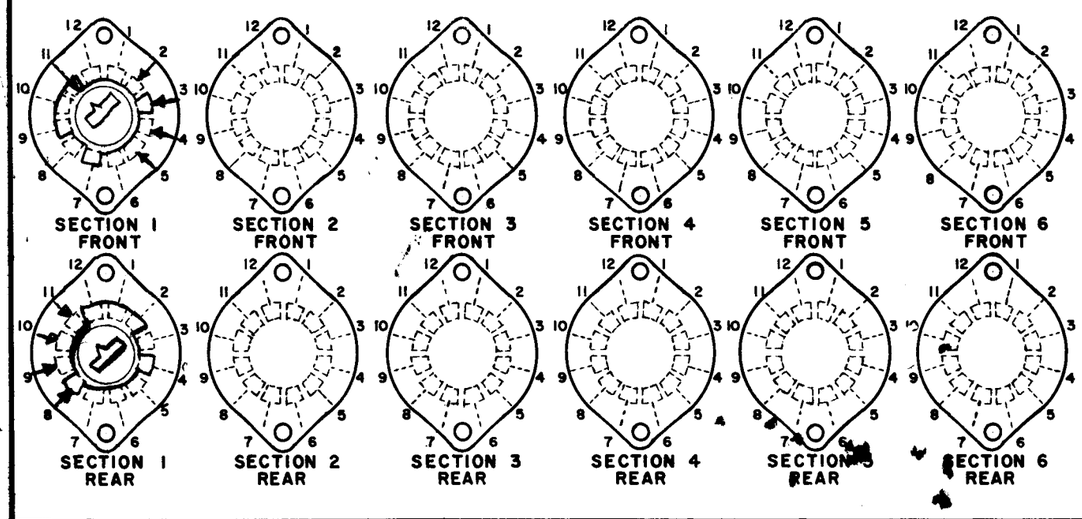

SWITCH, ROTARY – 12 POINT TYPE

SYMBOLS USED IN MARKING PRINT

QTY / UNIT	MODEL USED ON	ASS'Y NO.
7	RCST-1	AX 5223

APPLICATION

CODE

NOTICE TO PERSONS RECEIVING THIS DRAWING
THE TECHNICAL MATERIEL CORPORATION claims proprietary right in the material disclosed hereon. This drawing is issued in confidence for engineering information only and may not be reproduced or used to manufacture anything shown hereon without permission from THE TECHNICAL MATERIEL CORPORATION to the user. This drawing is loaned for mutual assistance and is subject to recall at any time.

UNLESS OTHERWISE SPECIFIED DIMENSIONS ARE IN INCHES AND INCLUDE CHEMICALLY APPLIED OR PLATED FINISHES

DECIMALS		FRACTIONS
.X ± .05	TOLS.	1/64
.XX ± .01		ANGLES
.XXX ± .005		0° -30'

MATERIAL

FINISH

FINAL APPROVAL	S.D.	DATE 1/7/80
MECH. DES.		DATE
ELECT. DES.		DATE
CHECKED		DATE
DRAWN	PH	DATE 12-15-77

THE TECHNICAL MATERIEL CORP.
MAMARONECK, NEW YORK

SWITCH, ROTARY

SIZE	CODE IDENT. NO.	DWG NO.	ISSUE
B	82679	SW 576	Ø

SCALE ____ SHEET ____ OF ____