THE CONTENTS OF THIS DRAWING ARE THE EXCLUSIVE PROPERTY OF THE TECHNICAL MATERIEL CORP. ITS UNAUTHORIZED USE FOR REPRODUCTION IN WHOLE OR IN PART IS STRICTLY FORBIDDEN.

REQ. PER UNIT	USED ON MODEL	ASS'Y. NO.	DATE		
1	TTR-10	AX-409	5-21-63	TZ-117	A

SYMBOL	FUNCTION	OPER. FREQ.	USED ON	QUAN.
T1101	IFT Tank	2 to 4 mc.	AX-409	1

SPECIFICATIONS

WINDING DATA: INDUCTANCE: 8 ± .20 uhy (BLK-BLU)
2.05 ± .2 uhy (BLK-GRN)
Total Turns - 43
Turns At Tap - 15

COIL FORM: Powdered Iron

LEADS: Size 28 Wire, 1-1/2 Long

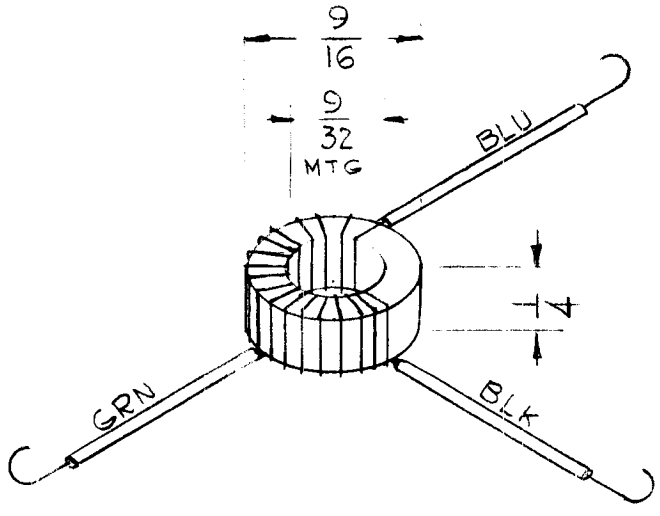

COLOR CODE

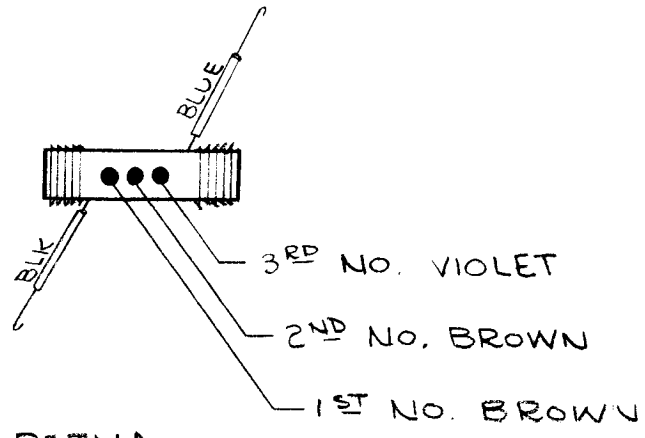

NOTE:
COLOR'S DENOTE
"TZ" NUMBER IN RETMA
COLOR CODE

SYM	DESCRIPTION	DATE	CH. NO.	DRAFTS	CHECKER	ENG. APP.
A	CLERICAL CHANGE	8.24.64		WB		

UNLESS OTHERWISE SPECIFIED DIMENSIONS ARE IN INCHES AND INCLUDE CHEMICALLY APPLIED OR PLATED FINISHES

SCALE: NONE

TOLERANCES: DECIMALS .X ±.05, .XX ± .01, .XXX ± .005; FRACTIONS ± 1/64; ANGLES ± 0° 30′

CODE: 2A-3155

REQ.	ITEM	PART NO.	DESCRIPTION	SYMBOL

STOCK SIZE

MATERIAL

TYPE & TEMPER | HEAT TREAT. SPEC.

FINISH & SPEC. NO.

KOHN

THE TECHNICAL MATERIEL CORP.
MAMARONECK, NEW YORK

TRANSFORMER, R.F., IFT
2 - 4 MC.

DRAWN	CHECKED	FINAL APPROVAL
G.D.L	5/28/63	
RON KOHN	—	TZ-117 A

ELEC. DES. APP. | MECH. DES. APP.

OGILVIE PRESS, INC., BROOKLYN 17, N. Y. REPROVEL NO. 400H 3787