IF IT IS FOUND DESIRABLE TO CHANGE ANY TOLERANCE OR OTHER DETAIL SPECIFIED ON THIS DRAWING NOTIFY THE PURCHASER PROMPTLY.

MAXIMUM ALLOWABLE TOLERANCES HAVE BEEN DETERMINED AND DEVIATIONS WILL BE CAUSE FOR REJECTION. REMOVE ALL BURRS AND SHARP EDGES

STANDARD DRAWING

UG-496/U

USED ON			
MODEL	PROJECT NO.	ASS'Y. NO.	DATE

NAVY DWG. NO. RE49F547
USE WITH CABLES RG 17/U, 18/U

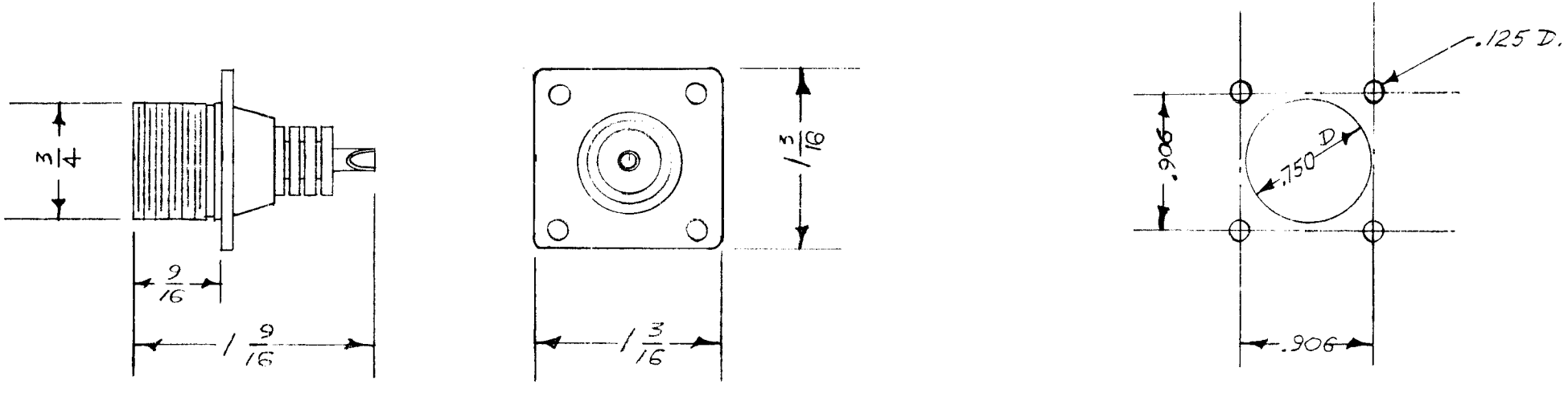

DIM. FOR REF. ONLY (EXCEPT DRILLING PLAN)

REF.: AMPHENOL 82-92

REQ.	ITEM	PART NO.	DESCRIPTION	SYMBOL
			THE TECHNICAL MATERIEL CORP. MAMARONECK, NEW YORK	
STOCK SIZE				
MATERIAL		WEIGHT PER PC.	CONNECTOR, RECEPTACLE	
			SERIES HN	
TYPE & TEMPER				
HEAT TREAT. SPEC.				
FINISH & SPEC. NO.				

ISSUE	ITEM	CHANGED FROM	DATE	CN. NO.	DRAFTS	CHECKER	ENG. APP.

DRAWN	ELEC. DES. APP.	MECH. DES. APP.
CHECKED	FINAL APPROVAL	

TOLERANCES

SCALE FULL

ALL OTHERS: DEC. DIM. ± FRAC. DIM. ± ANGULAR DIM. ±

DRILL, PUNCH, COMMERCIAL STOCK SIZES AND MANUFACTURERS TOLERANCES ARE NOT INCLUDED.

UG-496/U

FORM — 108