MASTER COPY
DO NOT DESTROY

PRELIMINARY

Technical Manual

for

GENERAL PURPOSE TRANSMITTER,

Model, GPTM-2.5JA

MASTER COPY
DO NOT DESTROY

THE TECHNICAL MATERIEL CORPORATION

MAMARONECK, N.Y. OTTAWA, CANADA

★

MASTER COPY
DO NOT DESTROY

PRELIMINARY

Technical Manual

for

GENERAL PURPOSE TRANSMITTER,

Model GPTM-2.5JA

THE TECHNICAL MATERIEL CORPORATION

MAMARONECK, N.Y. OTTAWA, CANADA

COPYRIGHT 1969
THE TECHNICAL MATERIEL CORPORATION

Foreword

NOTE

Although the Exciter Unit is capable of operation in the 2 to 32 megacycle (MHz) frequency range, the GPTM must be operated in the 4 to 27.5 megacycle (MHz) frequency range for full 1KW output (radiated power with modulation) in accordance with FCC requirements. These frequencies and applicable transmitter power output levels must be manually set by the operator. All single sideband modes of transmission are to be restricted to the upper-sideband only in accordance with FCC requirements.

CAUTION

Before operating the GPTM-2.5JA transmitter, allow at least 30 minutes warm-up to permit ovenized oscillators and standards to stabilize.

LOGISTICS

1. MATERIAL HANDLING.

Whether the equipment is crated or uncrated, various precautions must be observed in material handling.

CAUTION

Crates must never be rolled, crushed dropped, or struck-- they contain delicate electronic apparatus that can be damaged.

General safety precautions should be adhered to when moving the equipment to prevent injury to personnel or damage to equipment. Weight alone is not an indications that equipment can be moved safely by personnal; size is also an important consideration. A light-weight, large, and bulky item cannot easily be handled by one man. When personnel are involved in handling, a good rule-of thub to follow is: 50 pounds for one man, or 100 pounds for two men. These weights are considered a safe limit for carrying. When lifting an item, bend the knees, keep back straight and lift with the legs.

2. PACKAGING DATA.

The 2.5K transmitter is packed in 5 crates (not including running spares). Each crate is assigned a number from one to five and appears on the crate. Physically locate crate 1 closest to the intended point of installation; locate the other crates according to their numerical sequence, such that crate 5 is placed farthest away from crate 1. Arranging crates in this manner makes unpacking and assembling the transmitter easier.

The transmitter is cleaned, preserved, packaged, and marked in accordance with MIL-P-116, PMD-40, and MIL-STD-129.

3. EQUIPMENT INSPECTION AND DAMAGE.

The 2.5K transmitter has been assembled, calibrated, and tested at the factory before shipment. Inspect all packages for possible transit damage. While following the procedural installation instuctions, carefully unpack each crate as indicated; inspect all packing material for parts that may have been shipped as loose items.

With respect to equipment damage for which the carrier is liable, The Technical Materiel Corporation will assist in describing methods of repair and the furnishing of replacement parts.

4. UNCRATING METHODS.

The following uncrating methods must be adhered to when unpacking the transmitter to prevent equipment damage. Keep in mind the information previously discussed on material handling, packaging data, and equipment inspection.

a. Remove wire straps or bands from around crates with pair of snips.

b. Unless otherwise specified, remove nails from three sides of the crates with a nail puller. Do not use claw hammer or pinch bar.

c. Carefully remove sides of crate, then rip off moisture-proof paper. If a knife is used, care should be exerciesed not to mar equipment.

d. If equipment is not packed in cardboard carton, it may be removed from crate as prescribed in installation procedure.

e. If after removing moisture-proof paper a cardboard carton is encountered, carefully open with case cutter.

f. Where applicable, remove the following:

(1) Creased cardboard blocking pieces

(2) Barrier bags

(3) Tape

(4) Molded cushioning

(5) Cellulose wadding

(6) Tissue paper

g. An inventory of the equipment should be made at this time. As parts are unpacked, they should be marked off on the packing list or equipment supplied list. If anything is damaged, refer to paragraph 1-3.

THE TECHNICAL MATERIEL CORPORATION
COMMUNICATIONS ENGINEERS
700 FENIMORE ROAD MAMARONECK, N. Y.

Warranty

The Technical Materiel Corporation, hereinafter referred to as TMC, warrants the equipment (except electron tubes,* fuses, lamps, batteries and articles made of glass or other fragile or other expendable materials) purchased hereunder to be free from defect in materials and workmanship under normal use and service, when used for the purposes for which the same is designed, for a period of one year from the date of delivery F.O.B. factory. TMC further warrants that the equipment will perform in a manner equal to or better than published technical specifications as amended by any additions or corrections thereto accompanying the formal equipment offer.

TMC will replace or repair any such defective items, F.O.B. factory, which may fail within the stated warranty period, PROVIDED:

1. That any claim of defect under this warranty is made within sixty (60) days after discovery thereof and that inspection by TMC, if required, indicates the validity of such claim to TMC's satisfaction.
2. That the defect is not the result of damage incurred in shipment from or to the factory.
3. That the equipment has not been altered in any way either as to design or use whether by replacement parts not supplied or approved by TMC, or otherwise.
4. That any equipment or accessories furnished but not manufactured by TMC, or not of TMC design shall be subject only to such adjustments as TMC may obtain from the supplier thereof.

Electron tubes*furnished by TMC, but manufactured by others, bear only the warranty given by such other manufacturers. Electron tube warranty claims should be made directly to the manufacturer of such tubes.

TMC's obligation under this warranty is limited to the repair or replacement of defective parts with the exceptions noted above.

At TMC's option any defective part or equipment which fails within the warranty period shall be returned to TMC's factory for inspection, properly packed with shipping charges prepaid. No parts or equipment shall be returned to TMC, unless a return authorization is issued by TMC.

No warranties, express or implied, other than those specifically set forth herein shall be applicable to any equipment manufactured or furnished by TMC and the foregoing warranty shall constitute the Buyers sole right and remedy. In no event does TMC assume any liability for consequential damages, or for loss, damage or expense directly or indirectly arising from the use of TMC Products, or any inability to use them either separately or in combination with other equipment or materials or from any other cause.

*Electron tubes also include semi-conductor devices.

TABLE OF CONTENTS

Paragraph		Page
	SECTION 1 - GENERAL INFORMATION	
1-1	Purpose of Equipment.	1-1
1-2	Equipment Make-up.	1-1
1-3	Description of Equipment.	1-1
	a. RF Control and Indicator, SWCB-3K.	1-1
	b. Linear Amplifier, TLAB-2.5K.	1-1
	c. Low-Voltage Power Supply, AP-128A.	1-2
	d. High-Voltage Power Supply, AP-129.	1-2
	e. Multi-Mode Exciter, MMXM-2.	1-2
	f. Local Control Panel, TCP-1A.	1-3
	g. Alarm Panel, AX-633.	1-3
	h. Cabinet, Electrical Equipment, RAK-111-2J. . .	1-3
1-4	Technical Characteristics.	1-3
	SECTION 2 - INSTALLATION	
2-1	Initial Inspection.	2-1
2-2	Assembly.	2-1
2-3	Power Requirements.	2-1
2-4	Installation Procedures.	2-2
	SECTION 3 - OPERATOR'S SECTION	
3-1	General.	3-1

TABLE OF CONTENTS (CONT)

Paragraph		Page
	SECTION 3 - OPERATOR'S SECTION (CONT)	
3-2	Operating Procedure.	3-1
	a. Manual Tuning.	3-1
	SECTION 4 - PRINCIPLES OF OPERATION	
4-1	General.	4-1
4-2	Functional Analysis.	4-1
	a. General.	4-1
	b. Block Diagram Analysis.	4-1
	SECTION 5 - MAINTENANCE	
5-1	Preventive Maintenance.	5-1
5-2	Troubleshooting.	5-2
	a. Preliminary Electrical Inspection.	5-5
	b. Circuit Fusing Checks.	5-5
	c. Protective Interlock System.	5-6
	d. Protective Relay Checks.	5-6
	e. High-Voltage Removal Protective Circuit Check.	5-7
	f. Overload Adjustment.	5-8
5-3	Repair and Replacement.	5-8
	SECTION 6 - PARTS LIST	
6-1	Introduction.	6-1
	SECTION 7 - SCHEMATIC DIAGRAMS	

LIST OF TABLES

Table		Page
	SECTION 1 - GENERAL INFORMATION	
1-1	Major Components.	1-5
	SECTION 2 - INSTALLATION	
	SECTION 3 - OPERATOR'S SECTION	
3-1	Controls and Indicators.	3-4
3-2	Sample Tuning Chart.	3-8
	SECTION 5 - MAINTENANCE	

LIST OF ILLUSTRATIONS

Figure		Page
	SECTION 1 - GENERAL INFORMATION	
1-1	Radio Transmitter, Model GPTM-2.5JA.	1-0
	SECTION 2 - INSTALLATION	
2-1	Power Input Component Locations.	2-0
2-2	Three-Phase Power Input Wiring Diagram.	2-2
2-3	Outlined Dimensional Diagram.	2-8
	SECTION 3 - OPERATOR'S SECTION	
3-1	Controls and Indicators.	3-4
	SECTION 4 PRINCIPLES OF OPERATION	
4-1	Functional Block Diagram.	4-4

Figure		Page
	SECTION 5 - MAINTENANCE	
5-1	Fuse Locations.	———
	SECTION 7 - SCHEMATIC DIAGRAMS	
7-2	Schematic Diagram, TCP-1A.	7-7
7-3	Schematic Diagram, TLAB-2.5K.	7-9
	Schematic Diagram, AX633 and TFP - (See Technical Manuals)	
7-	Schematic Diagram, AP-128A.	7-
7-	Schematic Diagram, AP-129.	7-
7-	Schematic Diagram, SWCB-3K.	7-

Figure 1-1, RADIO TRANSMITTER, Model GPTM-2.5JA

SECTION 1

GENERAL INFORMATION

1-1. PURPOSE OF EQUIPMENT

Radio Transmitter, Model GPTM-2.5JA (figure 1-1) is a general purpose, manually tuned transmitting system providing 2500 watts peak envelope power (PEP) throughout the 2 to 29.9999 megacycle (MHz) frequency range.

Operating modes include single-sideband (SSB), amplitude modulation equivalent (AME), continuous wave (CW) and modulated continuous wave (MCW). Facsimile (FAX) and frequency-shift keying (FSK) may also be transmitted when used with additional equipment to provide FAX and FSK input signals.

Front-panel meter monitoring of all critical circuits and operational safety features are also provided. Safety features include mechanical/electrical interlocks, overload protective circuits for bias, plate current, screen current and transmission vswr.

1-2. EQUIPMENT MAKE-UP

The transmitter major components are listed in table 1-1. See figure 1-1 for physical component mounting locations and paragraph 1-3 for component descriptions.

1-3. DESCRIPTION OF EQUIPMENT

a. RF CONTROL AND INDICATOR, SWCB. - The SWCB contains the d-c controlled rotary solenoids for bandswitching. The unit also contains a power output meter that is calibrated in kilowatts; this meter also contains a second scale for measuring the transmission line SWR. An SWR switch is associated with the dual purpose output meter. The transmission line SWR is continuously monitored by a sensitive d-c relay that will de-energize the transmitter should the SWR exceed the preset levels.

b. LINEAR AMPLIFIER, TLAB. - The linear amplifier serves as a 40 db

power amplifier between the exciter and the antenna. The TLAB contains the tune, loading and bandswitching circuits and all r-f amplifier parts. The final tube (2.5Kw amplifier) of the 3-stage amplifier is convection air-cooled in the r-f section.

c. LOW VOLTAGE POWER SUPPLY, AP-128A. - (The low voltage power supply, supplies operating voltages to the linear amplifier.) (This unit also contains the overload protection circuit controls to adjust the overload relay sensitivity settings. The AP-128 provides bias, screen 2nd filament voltages to the linear amplifier plus voltages in the interlock and control circuits. The front panel contains filament and plate time meters and overload indicator lamps. All amplifier overload adjustments and bias controls are also front panel mounted.

d. HIGH VOLTAGE POWER SUPPLY, AP-129. - The 5 kv high voltage power supply, mounted at the bottom of the equipment cabinet, contains the high voltage solid state rectifier stacks, filtering and the delta-wye stepping transformer.

This unit generates 5000 volts d-c for the plate of the 2.5 kw power amplifier tube. An automatic 60-second time delay circuit is integrally mounted inside the unit to delay the application of screen voltages to the linear amplifier to prevent stripping of the PA filaments. This, in effect prevents a sudden heavy conduction of the linear amplifier.

e. MULTI-MODE EXCITER, MMXM-2.- The MMX is a completely transistorized 2-channel superheterodyne communications exciter that operated on any crystal controlled frequency in the range of 2 to 29.9999 megacycles.

The exciter provides an adjustable 100-MW excitation for SSB, AME, FSK, FAX, CW and MCW modes of operation.

NOTE

Additional equipment is required to provide FSK and FAX input signals.

f. LOCAL CONTROL PANEL, TCP - 1A. - The TCP controls the application of plate voltages to the 2.5 kw power amplifier section and monitors all interlock circuits contained in the cabinet. The TCP also controls the primary a-c power input to the cabinet. Other front panel controls inculde a reset push-button associated with the overload and bias relays in the low voltage power supply AP-128A.

g. ALARM PANEL, AX633. - The AX633 is an alarm and monitor unit, providing connector receptacles for monitoring the PA output. An audio input jack, front panel mounted, provides for insertion of a two-tone test signal for testing the exciter unit. An audio alarm device, with its associated on/off toggle switch, and a Line fuse are also front panel mounted. The alarm is activated only when the transmitter's high voltage is removed. This action is controlled by the high voltage power supply circuit breaker.

h. CABINET, ELECTRICAL EQUIPMENT, RAK-111-2JA.- The RAK houses all the components comprising the GPTM, measuring 51-inches high by 25-14-inches wide by 30-inches deep. Rear and side access doors permit ease in maintenance and accessability to hard-to reach components. The r-f output is fed to the directional coupler mounted on the upper rear portion of the cabinet. Heavy power supply components are bolted at the bottom, where the primary power connections are also made. A harmonic filter AF107 (used to reject all frequencies above the 32-megacycle range) is mounted at the rear right-hand portion of the cabinet.

1-4. TECHNICAL CHARACTERISTICS

Frequency Range:	2 to 29.9999 megacycles (MHz), bandswitched.
Output Power:	2500 watts PEP

1-4. TECHNICAL CHARACTERISTICS (CONT)

Operating Modes:	SSB, CW, MCW, FAX*, and FSK*. *With appropriate external equipment.
Tuning:	All tuning, loading and bandswitching controls on front panel.
Relative Humidity:	Up to 90%.
Ambient Temp. Range:	0° to 50°.
Metering:	Front panel meters monitor operation of all critical circuits.
ALDC:	ALDC (automatic load and drive control) circuit provided to improve linearity, limit distortion, and deliver a relatively constant output during high modulation peaks or load changes. Front panel control allows adjustment of ALDC attack point or circuit disabling.
Output Impedance:	50 ohms, unbalanced.
Harmonic Suppression:	Second harmonics at least 70 db below full PEP when measured with standard two-tone test.
Signal/Distortion Ratio:	Distortion products are at least 35 db below either tone of a standard two-tone test at full PEP output.
Hum and Noise Level:	Hum at least 50 db below full PEP; all other noise down at least 70 db.
Cooling:	Forced air.
Operating Temperature:	Designed to operate in a 0° to 50°C ambient with relative humidity of up to 90%. 190/208/220/230/380/440/ volts a-c.
Power Input:	50/60 cps, 3-phase.
Heat Dissipation:	5000 watts.
Air Intake:	500 CFM.
Weight:	1000 lbs. (approx).

TABLE 1-1. MAJOR COMPONENTS

TMC DESIGNATION
Cabinet, Electrical Equipment, RAK-111-2JA
Multi-MODE Exciter, Model MMXM-2
Linear Amplifier, Model TLAB-2.5K
RF Control and Indicator, Model SWCB
Linear Amplifier Control Panel, Model TCP-1
Low Voltage Power Supply, AP-128A
High Voltage Power Supply, AP-129
Alarm Panel, AX633
Harmonic Filter, Directional Coupler; Model AF107
Harmonic Filter Model TFP 2.5K.

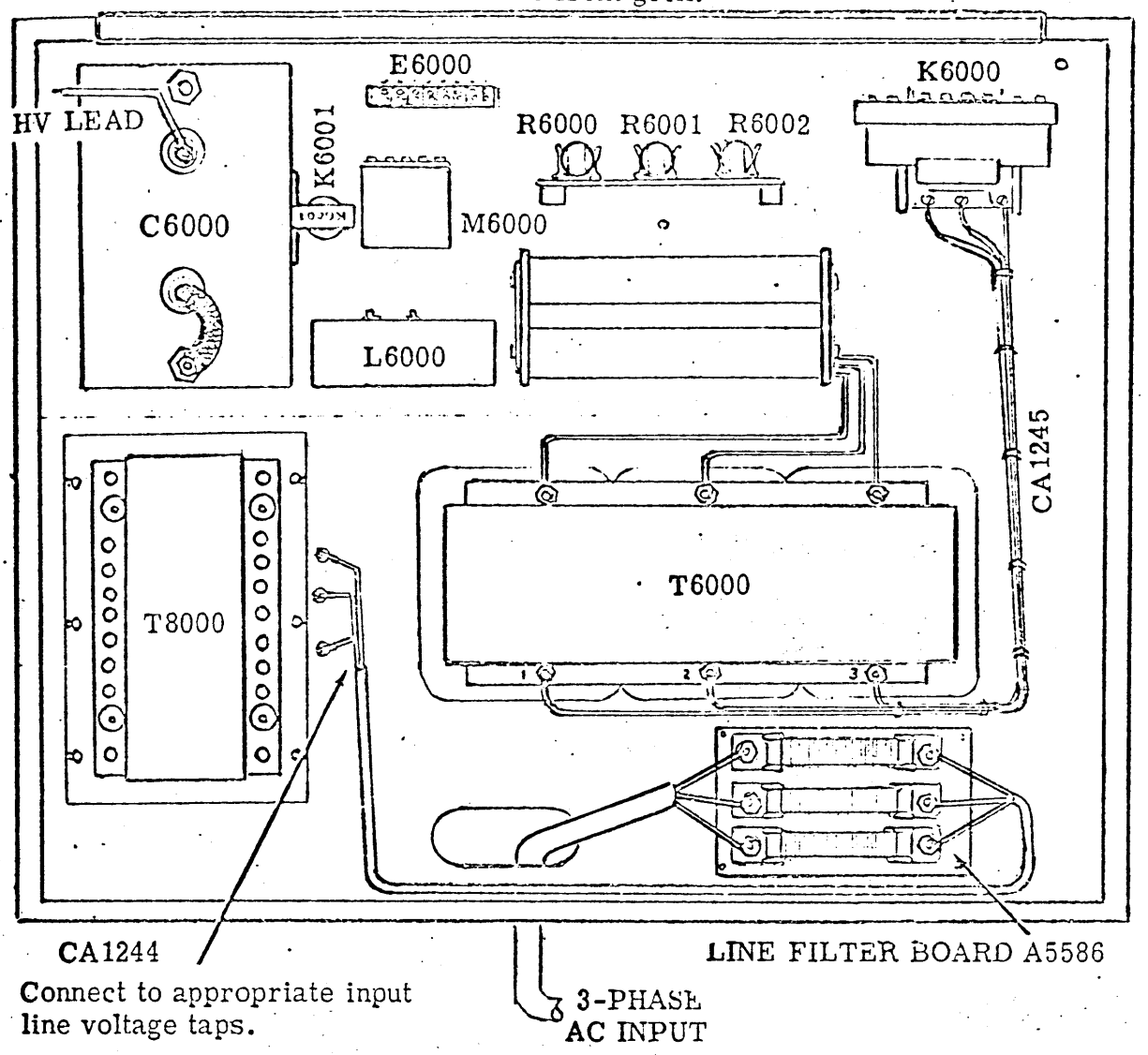

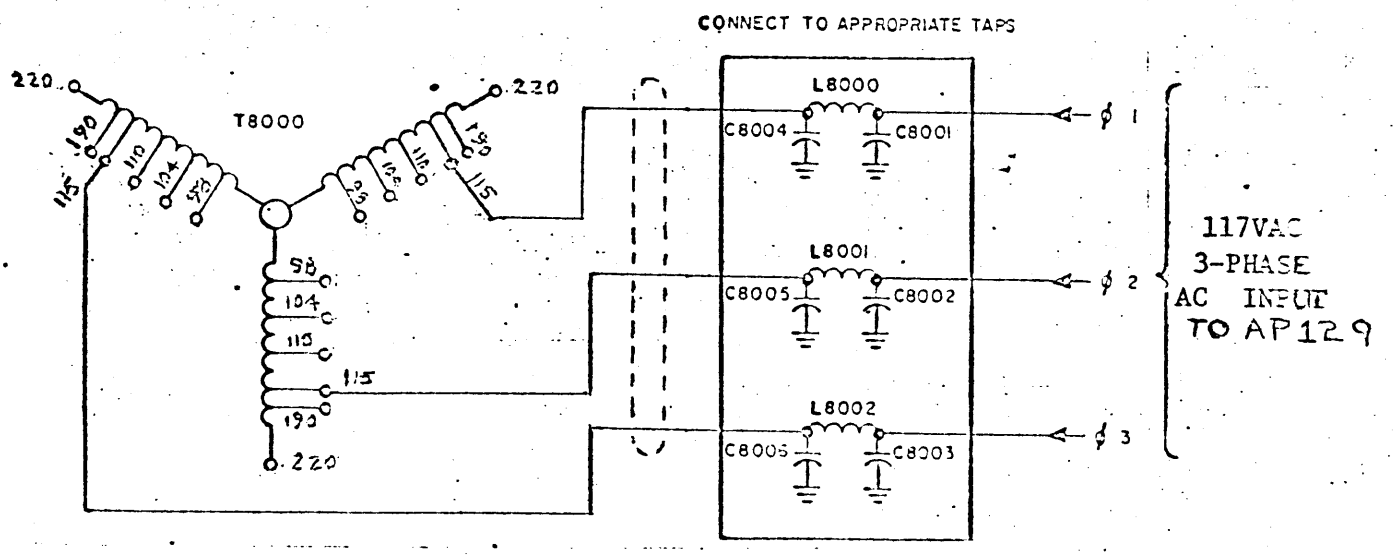

Figure 2-1 Input Power Connections

SECTION 2

INSTALLATION

2-1. INITIAL INSPECTION

Inspect the transmitter packing cases for possible damage when they arrive at the operating site. With respect to equipment damage for which the carrier is liable, The Technical Materiel Corporation will assist in describing methods of repair and the furnishing of replacement parts. Inspect the packing material for parts that may have been shipped as loose items.

2-2. ASSEMBLY

Install the transmitter components into the rack as shown in figure 1-1. Intra component cabling is shipped pre-installed in the rack in the form of cable harnesses attached to the rack structure. connect each free plug-end of the harness to its mating receptacle on the component by matching the "J" number (marked on the cable adjacent to the plug) with the "J" number appearing on the component adjacent to the receptacle. In the same way, connect each free end containing a fanning strip to its mating terminal block by matching "E" numbers. Refer to paragraph 2-4 for installation instructions.

2-3. POWER REQUIREMENTS.

The transmitter requires a 3-phase, 195/208/220/230/380/440 vac, 60 cps delta or wye source line. Referring to figure 2-1, make appropriate connections at taps of T8000 transformer at the bottom of the rack for the particular power source available. Then connect source at A5586 Line Filter.

It is recommended that an external 3-phase circuit breaker interface the transmitter with the main 3-phase supply voltage. The external circuit breaker will allow complete isolation of the transmitter voltage input and therefore pro-

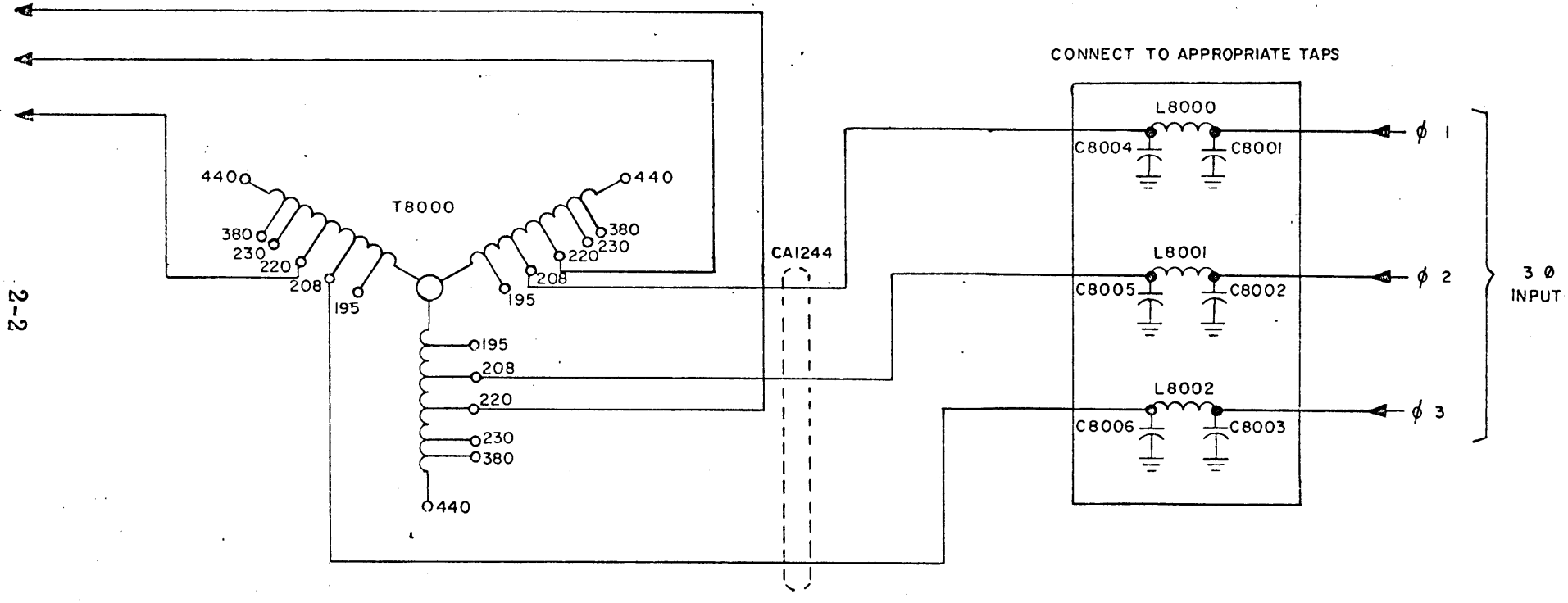

359-3

Figure 2-2. Three-Phase Power Input Wiring Diagram

vide for safe maintenance and servicing.

The external circuit breaker should be independent from other equipment.

2-4. INSTALLATION PROCEDURES

A minimum number of assemblies, subassemblies, components and hardware have been disassembled from the transmitter and separately packaged, thus reducing the possibility of equipment damage in transit. The method of disassembly and separate packaging also permits realistic equipment handling.

Carefully read the instructions for each step. After reading, consider the complexity involved in performing the step; it may be advisable to simulate a complex step before actually doing it. Make sure each step has been completed before proceeding t the next.

Cables, wires, and other miscellaneous items that are disconnected during linear amplifier disassembly are tagged and taped to the equipment. In some instances disconnected wiring found stays disconnected to maintain operation. The information on a given tag indicates the designated terminal on a component to which the tagged item must be connected. Make sure all cables and wires have been connected as designated on tags and that all packing material, tags and tape have been removed before sealing-up the frame or section of the frame with a front panel drawer, or piece of exterior trim. If any confusion arises regarding cable or wire connections that must be made, refer to the applicable interconnect wiring diagrams in Section 2 of the Technical Manual.

Temporary removal and replacement of panels, and component mounting assemblies are specifically called-out in the procedure in order to install various items. Do not anticipate instructions; to insure correct installation, perform each step exactly as it is written.

Non-specialized tools are not supplied with the equipment since these items should be contained in an equipped maintenance shop.

Make sure that installation personnel adhere to previously outlined tech-

niques of uncrating and material handling (see Logistics).

STEP 1

a. Unpacked assorted loose items from crate 1,

b. Check each item contained against equipment supplied list.

STEP 2

a. Unpack each item from crate 2.

b. Position rack upright, remove side and rear panels, this can be accomplished by turning the screw type fastener located at the top center of each panel.

c. Remove all packaging material from rack and position rack in accordance with pre-installation planning.

STEP 3

To secure rack in its permanent position precede as follows:

a. To gain access to the front mounting holes, loosen mounting hardware that fastens the high voltage power supply assembly to the rack frame.

CAUTION

To eliminate any possible damage, remove high voltage lead from C6000 on power supply assembly.

b. Slide power supply assembly toward rear of rack.

c. Secure rack in position with four mounting bolts.

d. Replace high voltage power supply assembly and fasten in place. Be sure to replace the high voltage lead to terminal of C6000.

STEP 4

a. Unpack crate 3.

b. Position transformer T8000 on base assembly.

c. Using hardware from crate 1, tightly bolt transformer to base assembly.

d. Remove filter out cable, CA1244 from crate 1 and fasten to terminals of transformer. (Refer to figure 2-1).

e. Using hardware from crate 1, place 4 ceramic standoffs with their associated washers on transformer.

f. Using cover and hardware from crate 1, plave transformer cover on the ceramic standoffs and secure.

STEP 5

a. Unpack crate 4.

b. Position transformer T6000 on base assembly.

c. Using hardware from crate 1, tightly bolt transformer to base assembly.

d. Connect high voltage transformer cable CA1245, which is attached to relay K6000 on power supply, to transformer as follows: white lead phase 1 terminal 1; grey lead phase 2 terminal 2; violet lead phase 3 terminal 3.

NOTE

Phase reversal may be required to correct operation of the equipment Should phasing problems occur, interchange any two of the three phase outputs.

e. Connect jumper leads between rectifier and transformer as follows:

RECTIFIER	TRANSFORMER
From CR6000, 1	To T6000 terminal 6
From CR6002, 3	To T6000 terminal 5
From CR6004, 5	To T6000 terminal 4

STEP 6

a. Remove line filterboard A5586 from crate 1 and remove line filterboard cover.

b. Using hardware from crate 1, tightly bolt line-filter-board to the base inside the bottom right-rear of the rack.

c. Using loose end of CA1244 from T8000, connect white lead, phase 1 to L8000, red lead, phase 2 to L8001, violet lead, phase 3, to L8002.

d. Route a-c input cable into base assembly through access hole and secure to appropriate terminals on line filterboard.

e. Position and secure filterboard cover to filterboard.

STEP 7

Refer to figure 1-1 for location of equipment in the rack.

a. Remove TCP from rack and plug-in relays K4000 and K4004 (shipped as loose items) in crate 1.

b. Remove SWCB from rack and plug-in relay K7002 (shipped as loose item) in crate 1.

c. Unpack AP 128A from crate 5 and plug-in relays K5000 through K5050 (shipped as loose items) in crate 1.

d. Unpack TLAB from crate 5 and plug-in tube V2002 (PL-8576) (shipped as a loose item) and tighten tube clamp ring.

STEP 8

Now that each drawer assembly is unpacked, install it in its designated position (see figure 1-1) in the rack. To install any drawer assembly, proceed as follows: (see figures 2-4 and 2-5).

NOTE

To insure greater rack stability start with bottom units first and work up.

a. Untape or unstrap cable assemblies, cable retractors, and all other components secured to the inside of frame for shipment.

b. Pull out center section of drawer tracks until they lock in an extended position.

c. Position slide mechanisms in tracks and ease modular unit into track until lock buttons engage holes in tracks.

d. Where applicable, pull tilt handles on sides of drawer vertically.

NOTE

When making cable or wire connections to drawer, secure cables or wires with cable clamps, where applicable.

e. Make necessary cable and electrical connections as indicated by interconnect wiring diagrams in section 2.

f. Pull tilt handles on sides of drawer and re-position drawer horizontally.

g. Press lock buttons on tracks; slide drawer completely into compartment.

h. Using hardware from crate 1 secure front panels of drawers to rack frame.

STEP 9

a. Remove antenna connector from crate 1 and install on transmitter. Connector PL222 is to be fitted to the unbalanced coaxial transmission line and then attached to the transmitter coupler jack.

b. Using grounding hardware supplied in crate 1 secure grounding strap to rear of unit in the threaded hole in rear center of base.

NOTE

The transmitter requires a good ground connection for efficient operation. Problems that may occur when poor ground connections exist are as follows:

(1) "Take-off". Unit does not tune correctly. As resonance is achieved, the transmitter output tries to mistakenly reach a peak value and is prevented by overload controls tripping and de-energizing the transmitter.

(2) "Hot Frame". R-f energy is felt at all parts of the frame and an r-f arc may be drawn from the frame.

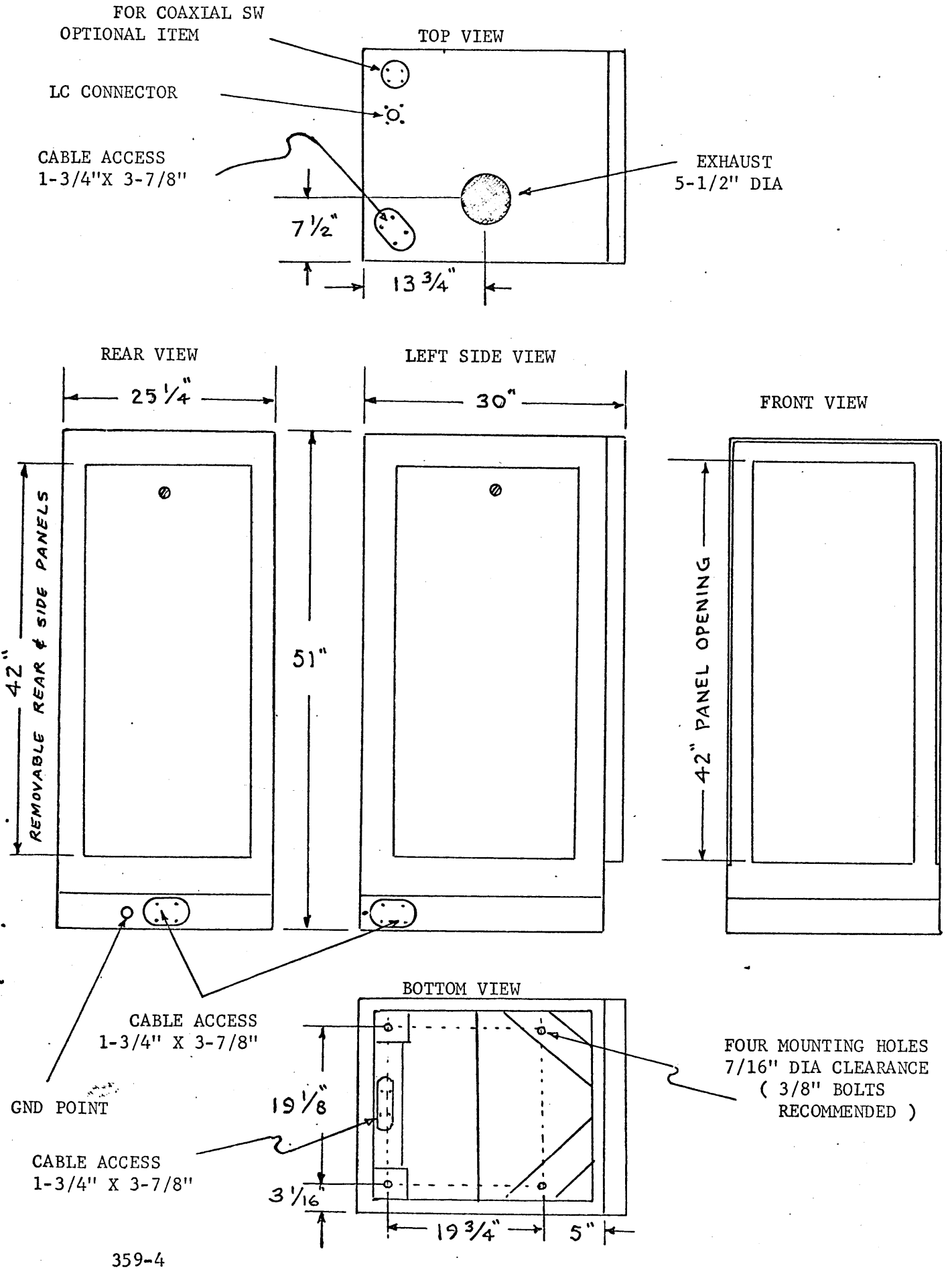

Figure 2-3. Outline Dimensional Diagram

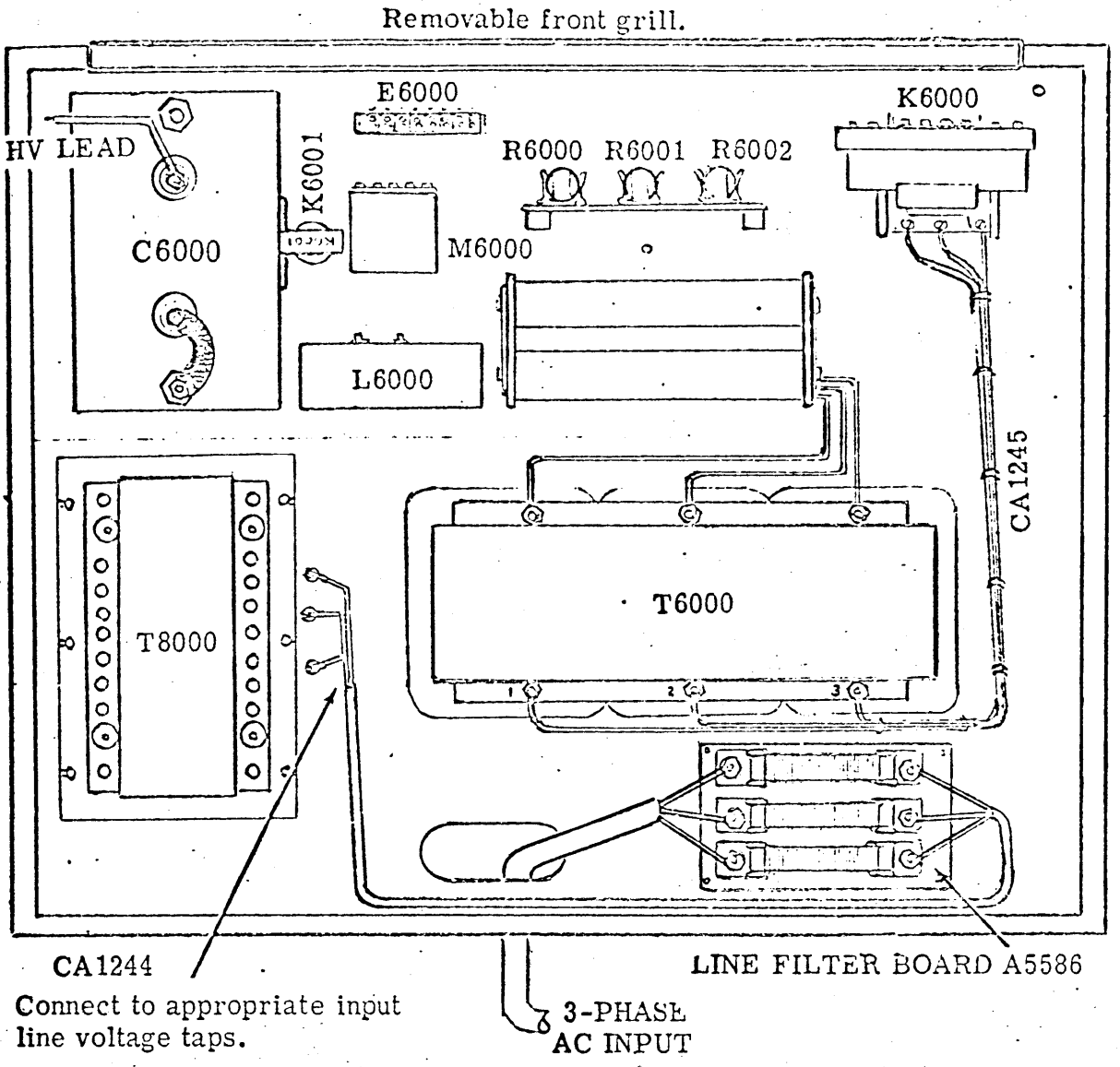

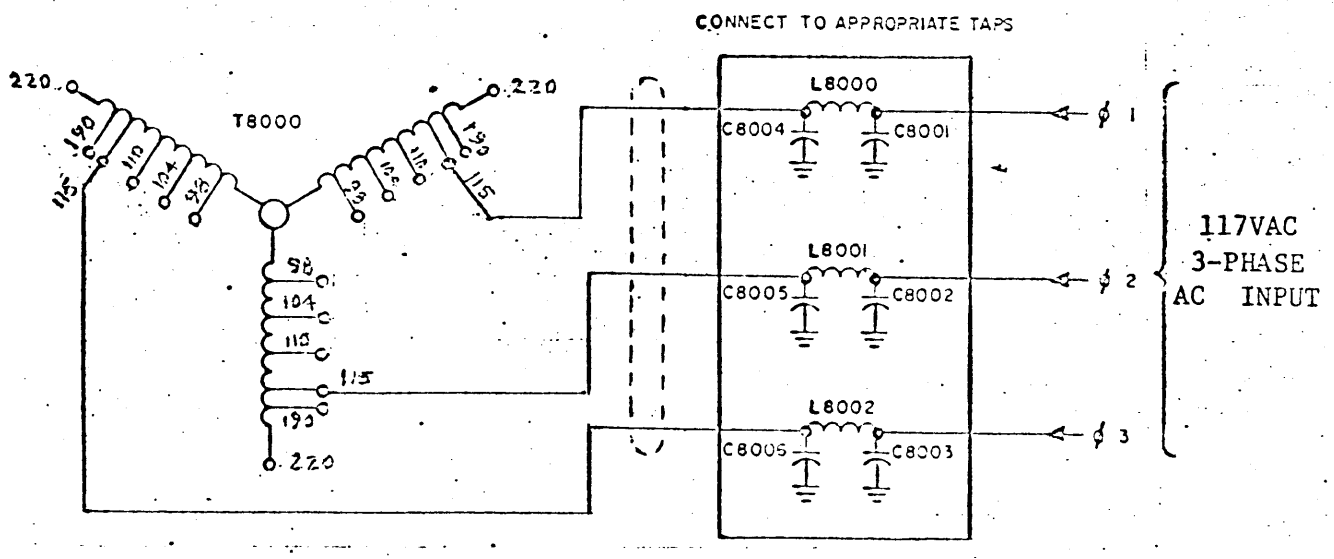

Figure 2-2 Input Power Connections, AP-129

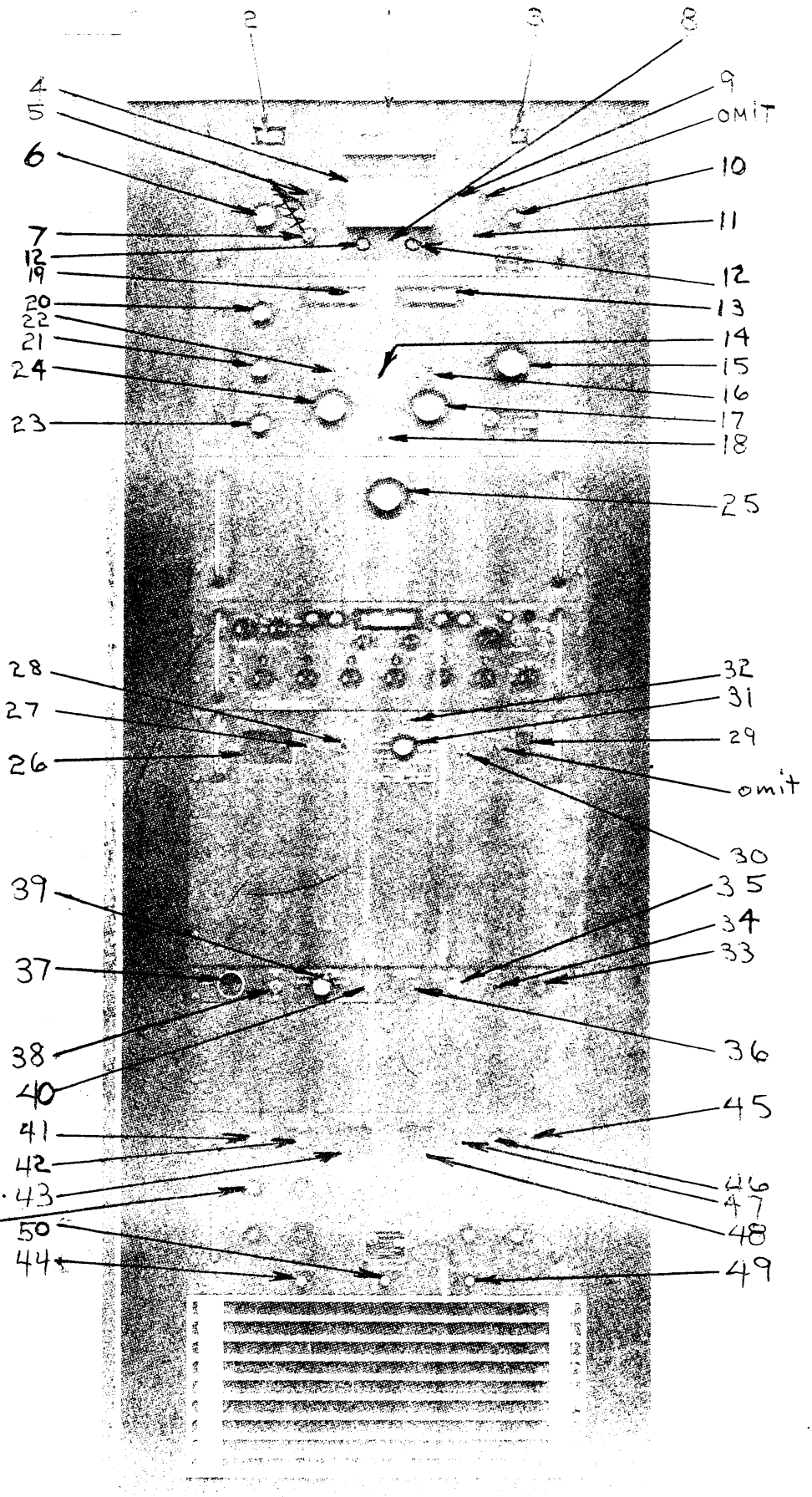

Figure 3-1 Controls and Indicators for GPTM-2.5JA

SECTION 3

Operators Section

3-1 General

This section has been prepared for technicians having experience on similar or related equipment. Before operating the transmitter, the operator should familiarize himself with the controls and indicators illustrated in figure 3-1 and described in table 3-1. Refer to section 1 of this manual for detailed technical information regarding the transmitter modular units. Table 3-2 provides typical tuning information. Determine operating frequency, select proper band position by rotating bandswitch knob on SWCB -3K (Top unit) and follow outlined tune-up procedure.

TUNEUP PROCEDURE FOR GPTM-2.5JA

STEP	OPERATION	NORMAL INDICATIONS
1	Set main power circuit breaker (26) to the ON position.	The Technimatic light (1) must come on PA blower and top fan must start running.
2	Set Auto/Manual switch (28) to Auto and Servo ON/OFF (30) switch to on.	No Indications.
3	Place MMX exciter/PTT on Power ON/Standby switches to ON ( ) ( ).	Monitor meter must light on MMX power lamp and exciter lamp must be lit.
4	Select the desired MMX operating frequency ( ). Place RF output control ( ) to its' extreme counter-clockwise positions.	No Indications.
5	Place the Low Voltage breaker located on the AP-128 Low Voltage Power Supply to the ON position.	No Indications.

NOTE

At this time is is advisable to check the plate currents of the 1st and 2 nd RF amplifiers tubes. They should be checked in the following manner:
(1) Place the multimeter switch (23) to the 1st Amp Ip position and observe a reading of "10" on multimeter (19). Should the meter reading indicate some other value adjust the 1st Amp bias adjust (47) located on the

NOTE (cont)

Low Voltage Power Supply, for "10" on multimeter.
(2) Place multimeter switch (23) to the 2nd Amp Ip position and observe a reading of "12" on multimeter (19). Should the meter indicate some other value adjust the 2nd Amp bias adjust (46), located on the Low Voltage Power Supply, for "12" on multimeter.

STEP	OPERATION	NORMAL INDICATIONS
6	Set MMX controls as follows: carrier-control( )-Adjust for full carrier mode switch ( ) - USB meter switch ( ) - RF USB and LSB ( ) ( ) - "0" RF output contorl ( ) adjust to 100 milliwatts	Meter on MMX will read full when meter switch is in carrier position. When in "RF" position meter will read between 1 and 2.
7	On RF Power Ampl. Place multimeter switch (23) to the 2nd Amp Ep. Position.	No indications at this time. (However when excitation from exiter is applied to RF input of P.A. multimeter iwll indicate RF drive.
8	Advance RF Gain control on SWCB (10) clockwise for a slight indication on the multimeter (19).	Indication will be noted on multimeter as RF Gain control (10) has been advanced.
9	Adjust 2nd Ampl. tuning control (24) for a peak indication on RF amplifiers multimeter (19).	Peak indication will be noted on multimeter (19).
10	Reduce RF output by turning the RF Gain contorl on SWCB (10) to its extreme counterclockwise position.	Meter indication on multimeter should indicate zero.
11	Place High Voltage breaker (29) to ON position.	High Voltage lamps (2) must light PA Plate current meter (13) should indicate 450 ma (should some other value be noted adjust the PA bias adjust (45) located on the Low Voltage Power Supply for a reading of 450 ma on the PA Plate Current meter (13)).
12	Advance the RF Gain control on the SWCB to a point where the PA plate current increases.	PA plate current meter indication increases from original reading.
13	Adjust the PA tuning control (24) until a resonant dip is obtained on the PA Plate current meter (13).	Observe resonant dip in PA Plate current.

STEP	OPERATION	NORMAL INDICATIONS
14	Adjust the PA load control (17) until PA is properly loaded. After each change in loading the PA Tune control (24) must be returned to resonance.	Proper loading will occur when maximum output is obtained on Output meter (4). At a power level of one kilowatt the PA Plate current should be between .6 and .75 Amps depending on the frequency.
15	Advance RF Gain control on SWCB (10) until output meter reaches pre-determined power level.	PA Output meter will indicate desired power output level.
16	Reduce Power output by turning the RF Gain control on the SWCB (10) to its extreme counterclockwise position.	Power output indicates zero.
17	Place H.V. breaker to the OFF position. (29)	High Voltage lamps will go out PA Plate current meter will indicate zero.

The GPTM-2.5JA transmitter at this time has been initially tuned up on a carrier frequency. The desired mode of operation will be determined by control settings of the MMX exciter. Refer to the MMX manual for control settings on the exciter for the various mode of emission, SSB, AM, FSK, FAX, etc.

TABLE 3-1. CONTROLS AND INDICATORS

MODULAR UNIT	ITEM NO. (Fig. 3-1)	DESIGNATION	FUNCTION
RAK	1	TECHNIMATIC lamp	Indicates when primary circuit breaker (39) is set at ON position.
	2	HIGH VOLTAGE lamp	Indicates transmitter is ON ready for operation.
	3	HIGH VOLTAGE lamp	Indicates when high voltage circuit breaker (42) is set at ON position.
Standing Wave Ratio Indicator SWCB	4	Power Meter	Indicates forward and reflected power (KW).
	5	24V DC fuse	Protective fuse for control circuits; lights to indicate fuse has blown.
	6	Frequency Selector switch (no panel designation)	Selects frequencies in the 2- to 30-mc range.
	7	230V AC fuse	Protective fuse for power output meter circuits; lights to indicate fuse has blown.
	8	Power Limit Control (no panel designation)	Used for setting minimum r-f power output of transmitter.
	9	SWR OVLD lamp	Lights when standing wave ratio is excessive.
	10	RF GAIN control	Adjusts excitation level to the TLAB (higher level in INCR arrow direction).
	11	KW/REFL switch	Activates meter (4) for forward or reflected power indication.
	12	Power Limit Control (no panel designation).	Used for setting maximum r-f power output of transmitter.
Linear Amplifier TLAB	13	IPA PLATE CURRENT indicator	Indicates intermediate power amplifier plate current.
	14	ALDC ADJ control	Adjusts level of negative feedback applied to the exciter.

TABLE 3-1. CONTROLS AND INDICATORS

MODULAR UNIT	ITEM NO. (Fig. 3-1)	DESIGNATION	FUNCTION
	15	PA BANDSWITCH switch	Selects 2- to 29.9999 mc range in 9 increments.
	16	Indicator (no panel designation)	Veeder indicator for LOAD control (18).
	17	LOAD control	Adjusts the loading of the final PA.
	18	RF trig control (no panel designation)	PA plate trigger adjustment for sensing circuit (factory adjusted).
	19	MULTIMETER indicater	Indicates 1st amplifier plate current, 2nd amplifier plate current, 2nd amplifier r-f plate voltage, and power amplifier r-f plate voltage.
	20	2ND AMPL BANDSWITCH	Selects 2- to 29.9999 mc range in 9 increments.
	21	2ND AMPL TUNING control	Adjusts resonance of the 2nd amplifier.
	22	Indicator (no panel designation)	Veeder indicator for TUNE control (25).
	23	MULTIMETER switch	Selects circuit for MULTIMETER (20).
	24	TUNE control	Adjusts resonance of the final PA.
Filter, Model TFP-2.5K	25	Filter Bandswitch	Automatically Prepositions Filter to corresponding frequency band used.

NOTE

For Exciter Controls and Indicators, Refer to the individual manual.

Linear Amplifier Control Panel TCP	26	MAIN POWER circuit breakers	Controls application of power to all units of the transmitter, excluding SMEC.
	27	OVLD RESET switch	Resets the overload relays.
	28	XMTR TUNING AUTO/MANUAL switch	When set at AUTO, allows automatic operation of transmitter; when set at MANUAL, allows the transmitter to be tuned manually.

TABLE 3-1. CONTROLS AND INDICATORS

MODULAR UNIT	ITEM NO. (Fig. 3-1)	DESIGNATION	FUNCTION
Linear Amplifier Control Panel TCP (CONT)	29	HIGH VOLTAGE switch	Control application of power to high voltage power supply AP-129.
	30	SERVO ON/OFF switch	When set at ON, enables activation of automatic band switching and tuning circuits.
	31	Interlock switch (no panel designation)	Used to locate open interlock switches (indicated by indicator lamp 46).
	32	Interlock Indicator lamp (no panel designation)	When lit, indicates interlock switch is closed.
Alarm Panel AX633	33	DC fuse	Protective fuse for alarm device circuit.
	34	AUDIO IN jack	Provides for audio test signal to be applied (during maintenance procedures).
	35	PA MON jack	Provides PA monitoring outlet for test purposes.
	36	EXCITER MON jack	Provides exciter monitoring outlet (for test purposes).
	37	Alarm Device (no panel designation)	Alarm sounds if primary power to high voltage power supply is interrupted.
	38	ALARM ON/OFF switch	Activates alarm device circuit when set at ON position.
	39	SENSE switch	Provides for the selection of circuits (as marked) for test purposes.
	40	SENSE jack	Provides monitoring outlet for the sensing positions of SENSE switch 69.
	41	PA PLATE OVLD ADJ potentiometer	Used to set plate overload.
	42	Mode SW, SSB or CW	Used to set at mode of Exciter.

TABLE 3-1. CONTROLS AND INDICATORS

MODULAR UNIT	ITEM NO. (Fig. 3-1)	DESIGNATION	FUNCTION
	43	FILAMENT TIME meter	Registers filament operation time.
Low Voltage POWER Supply AP128 (CONT)	44	PA BIAS OVLD lamp	Overload indicator light.
	45	PA BIAS ADJ potentiometer.	Adjust PA grid bias.
	46	2ND AMPLIFIER ADJ potentiometer.	Adjust 2nd amplifier grid bias.
	47	1ST AMPL BIAS ADJ potentiometer	Adjust 1st amplifier grid bias.
	48	PLATE TIME meter	Registers final PA plate operation time.
	49	PA SCREEN OVLD lamp	Overload indicator light.
	50	PA PLATE OVLD lamp	Overload indicator light.

SAMPLE TUNING CHART

F OUT MC	PA BAND	PA TUNE	PA LOAD	PA 1 AMP	P OUT KW PEP	DIST. DB
2.0	2-2.5	143	120	.75	2.5KW	40
2.4999	2-2.5	112	041	.7	2.5KW	40
2.5	2.5-3.0	122	105	.8	2.5KW	35
2.9999	2.5-3.0	105	059	.85	2.5KW	35
3.0	3.0-5.0	114	118	.88	2.5KW	35
4.9999	3.0-5.0	085	048	.88	2.5KW	35
5.0	5.0-7.0	085	048	.85	2.5KW	37
6.9999	5.0-7.0	081	041	.9	2.5KW	36
7.0	7.0-11.0	099	063	.95	2.5KW	35
10.999	7.0-11.0	077	036	.9	2.5KW	35
11.0	11.0-15.0	088	056	.92	2.5KW	35
14.999	11.0-15.0	078	037	.9	2.5KW	35
15.0	15.0-19.0	079	056	.92	2.5KW	35
18.999	15.0-19.0	075	039	.88	2.5KW	36
19.0	19.0-24.0	075	057	.75	2.5KW	36
23.999	19.0-24.0	047	042	.6	2.5KW	35
24.0	24.0-30.0	076	052	.8	2.5KW	37
29.999	24.0-30.0	057	042	.75	2.5KW	38

SECTION 4

PRINCIPLES OF OPERATION

4-1. GENERAL.

The transmitter operates in the frequency range of 2 to 29.9999 megacycles (mHz), producing a power output of up to 2500 watts. Automatic pre-positioning circuits are provided in he SWC( )-3K to pre-position the linear amplifier and the TFP-2.5K band switches to the selected operating frequency range. Pre-set the exciter r-f input to the required excitation level manually. Other circuits include electro-mechanical voltage safety interlocks, an audible alarm circuit, and a series of critical circuit metering and indicating devices.

4-2. FUNCTIONAL ANALYSIS.

a. General.- The Linear Amplifier comprises ten (10) major component units:

1. RF Control and Indicator, SWCB-3K
2. Linear Power Amplifier, TLAB-2.5K
3. Linear Amplifier Control Panel, TCP-1A
4. Alarm Panel, AX633
5. High Voltage Power Supply, AP-129
6. Low Voltage Power Supply, AP-128A
7. Model AF-107, Harmonic Filter/Directional Coupler
8. Filter, Model TFP-2.5K
9. Cabinet, Elect. Equipment RAK-111-2JA

b. Block Diagram Analysis. - The transmitter may be divided into two (2) major sections: the exciter section and the linear power amplifier section. The exciter section circuit descriptions and components are discussed in the associated exciter manual. The linear power amplifier section circuit descriptions and components are discussed in this manual. For simplicity in description, the following text will discuss the operation of the linear power amplfier section only, integrating the required exciter section functions where necessary. Figure 4-1 illustrates a simplified block diagram of the linear power amplifier section.

The exciter section is used to accept the input intelligence, translate it to the desired mode of operation, and process this to the selected operating frequency range.

The linear power amplifier section is used to accept the Exciter's output from the associated exciter section, amplify it (up to 2.5 kilowatts), and apply it to the associated antenna for transmission.

The SWC( )-3K accepts the exciter r-f output, routes it through an RF GAIN potentiometer, for excitation level control, and applies it to the input of the linear amplifier TLA( )-2.5K. Low level r-f signals applied to the TLA( ) are routed through a broadband amplifier, a tuned second amplifier and a tuned final amplifier to the r-f output jack at the rear of the TLA( ). The second and final amplifier bandswitches are automatically pre-positioned by a switch located on the SWC( ). Front panel meters provide the required indications for tuning and loading the amplifier stages. Operating power for the linear amplifier is furnished by power supplies AP-128A and AP-129. The linear amplifier output is coupled to the antenna via Harmonic Filter/Directional Coupler, Model AF-107 assembly (Refer to Figure 4-1). When the MANUAL/AUTO switch on the TCP control panel is set at AUTO, contacts of a relay in the AP-128A supply voltage required to activate the stepping switches attached to the TLA( ) second and final PA bandswitches.

The SWC( ) pre-position switch routes the pre-position reference signal to the linear amplifier TLA( ) bandswitch control circuitry.

The low voltage power supply AP-128A provides filament voltage and bias for all amplifier stages in the transmitter, plate and screen voltages for the first two amplifier stages, screen voltages for the PA stage, and 24 vac for the interlock circuits. The AP-128A contains overload relays that open interlocks, cutting off all voltages to the PA stage when preset overload levels are exceeded. The protective circuits sample the PA plate and screen currents and bias supply voltages and activate the overload relay of the SWCA when any of these currents are excessive.

The high voltage power supply AP-129 supplies the 5000 vdc for the operation of the final power amplifier of the TLA( ). The AP-129 receives its operating power from a high voltage contactor that is energized by phase-two voltage supplied by the interlock relay, and phase-three voltage that is supplied by the HIGH VOLTAGE switch in the TCP.

The TLA( ) linear amplifier r-f output, at the selected operating frequency range and power level, is filtered by the TFP-2.5K and then routed to Harmonic/Directional Coupler, Model AF-107. From the AF-107 assembly output is connected to the ANTENNA connector on top of the Equipment Rak.

ENGINEERING SKETCH

NOT FOR PRODUCTION

D

C

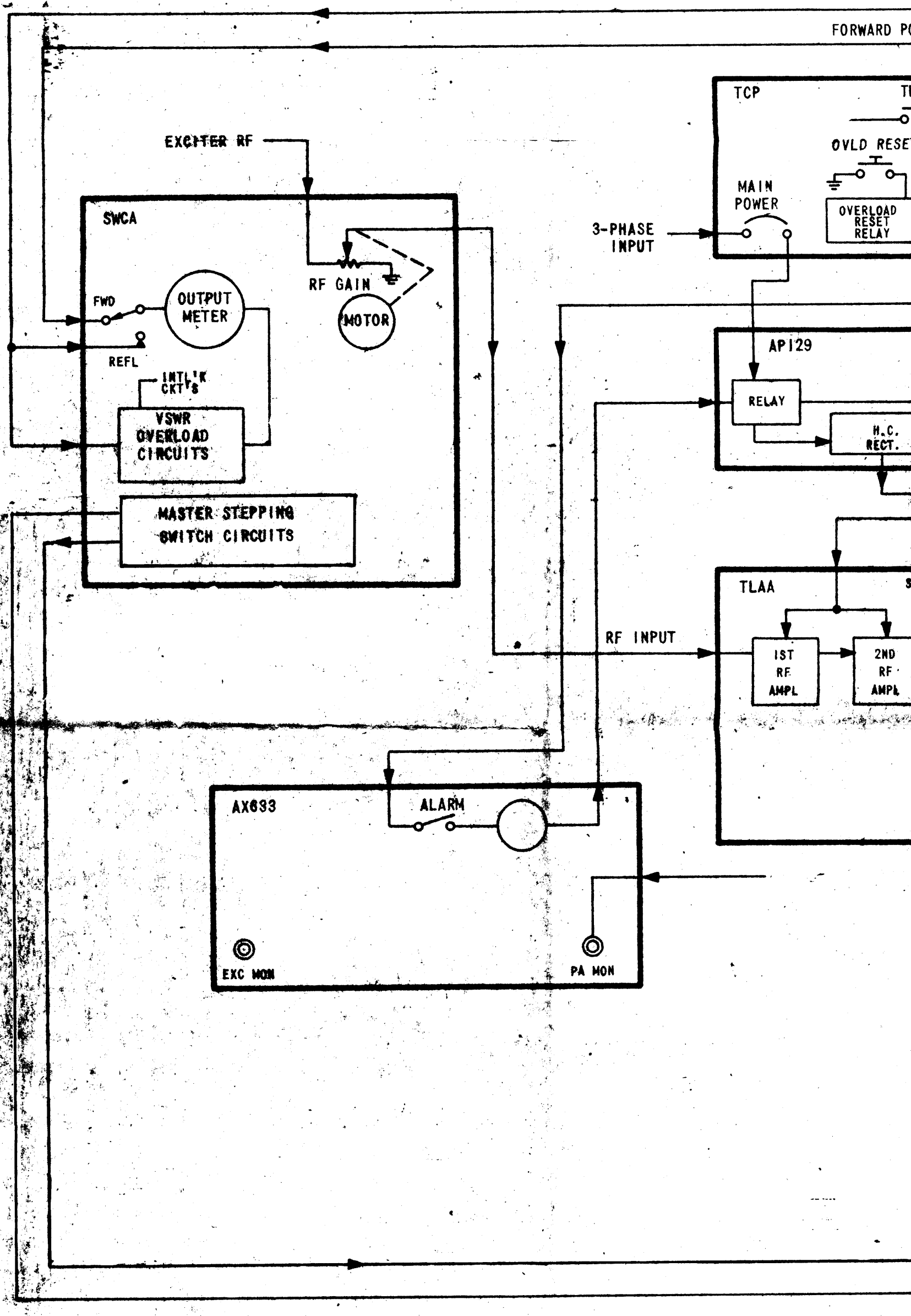

5 4

FORWARD POWER

TUNE

OVLD RESET

HIGH VOLTAGE

OVERLOAD RESET RELAY

BIAS, PLATE, SCREEN, OVERLOAD & INTERL'K RELAYS

AUTO ON SERVOS MANUAL OFF

TIMER

H.C. RECT.

AP128

BIAS OVLD IND

PLATE OVLD IND

SCRN OVLD IND

IPA VLTG

PA SCRN VLTG

RELAYS

ANTENNA OUTPUT RF.

AF107

HARMONIC FILTER 2-30 MC

DIRECTIONAL COUPLER

RF OUTPUT

STEP SW.

STEP SW.

2ND RF AMPL

POWER AMPL

RF OUTPUT

TFP

2-3 Mc

3-4 Mc

4-6 Mc

6-9 Mc

9-13Mc

13-18Mc

MOT

L

SW

SW

BANDSWITCH

BANDSWITCH CONTROL

SYSTEM INTERLOCKS

3 | 2 | 1

REVISIONS							
ZONE	LTR	DESCRIPTION	DATE	E.M.N.NO	DRAFT	CHKD	APPD

D

C

B

EXCITER RF

SWCA

RF GAIN

MOTOR

FWD

OUTPUT METER

REFL

INTLK CKTS

VSWR OVERLOAD CIRCUITS

MASTER STEPPING SWITCH CIRCUITS

MAIN POWER

3-PHASE INPUT

OVERLOAD RESET RELAY

AP129

RELAY

H.C. RECT.

TLAA

RF INPUT

1ST RF AMPL

2ND RF AMPL

AX633

ALARM

EXC MON

PA MON

C

A

FCI-1 -17 (10-66)

8 7 6

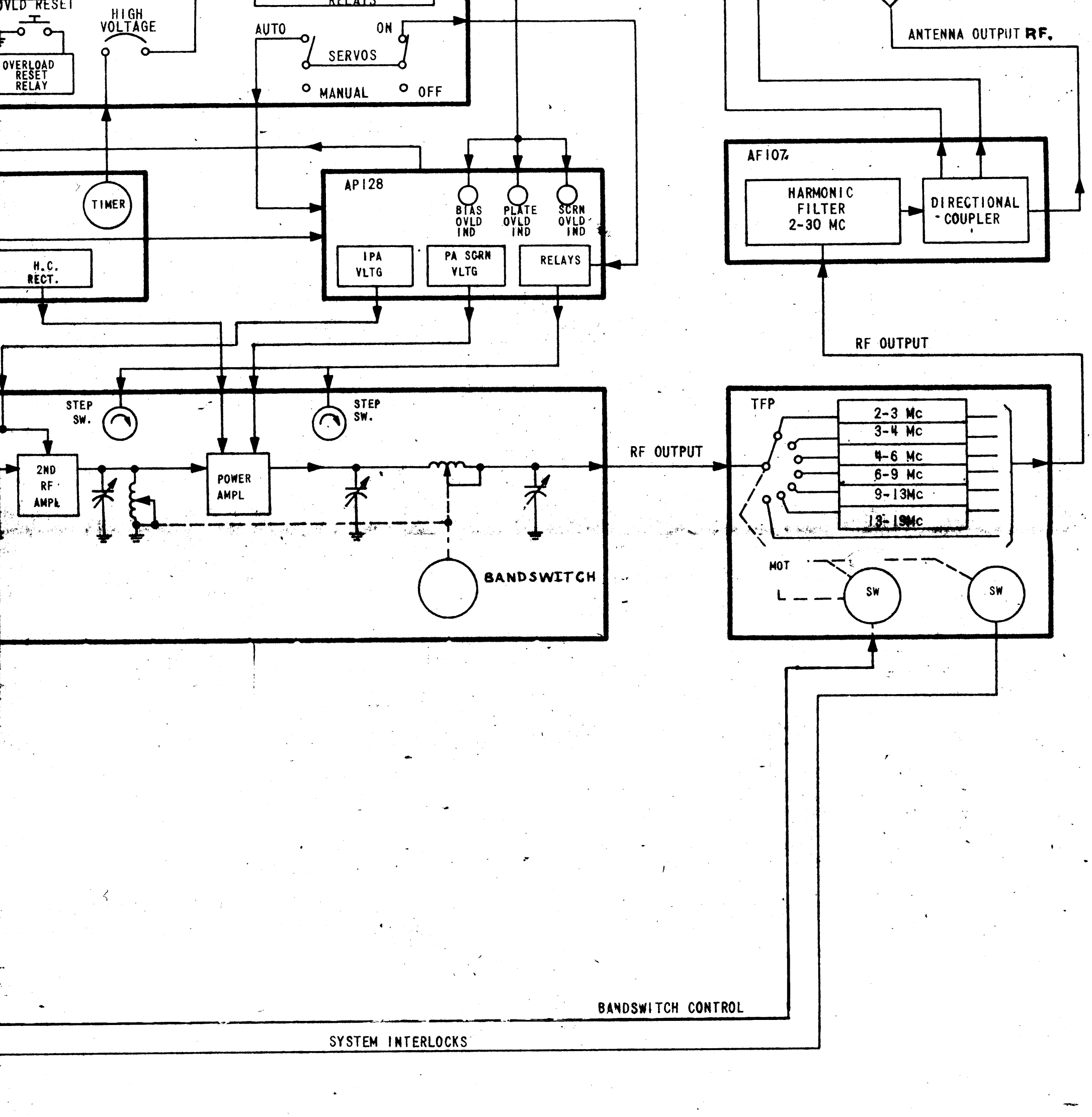
OVLD RESET
HIGH VOLTAGE
OVERLOAD RESET RELAY
AUTO
ON
SERVOS
MANUAL
OFF
ANTENNA OUTPUT RF.
AF107
HARMONIC FILTER 2-30 MC
DIRECTIONAL COUPLER
AP128
BIAS OVLD IND
PLATE OVLD IND
SCRN OVLD IND
IPA VLTG
PA SCRN VLTG
RELAYS
TIMER
H.C. RECT.
RF OUTPUT
STEP SW.
STEP SW.
2ND RF AMPL
POWER AMPL
RF OUTPUT
TFP
2-3 Mc
3-4 Mc
4-6 Mc
6-9 Mc
9-13Mc
13-19Mc
MOT
L
SW
SW
BANDSWITCH
BANDSWITCH CONTROL
SYSTEM INTERLOCKS

C

B

QTY. REQ.	ITEM	PART NO.	DESCRIPTION	SYMBOL

MASTER COPY
DO NOT DESTROY

SECTION 5
MAINTENANCE

5-1. PREVENTIVE MAINTENANCE.

In order to prevent equipment failure due to dust, dirt or other destructive elements, it is suggested that a schedule of preventive maintenance be set up and adhered to.

At periodic intervals, the equipment should be removed from its mounting for cleaning and inspection. The wiring and all components should be inspected for dirt, dust, corrosion, grease or other harmful conditions. Remove dust with a soft brush or vacuum cleaner. Remove dirt or grease with any suitable cleaning solvent. Use of carbon tetrachloride should be avoided due to its highly toxic effects. Trichlorethylene or methylchloroform may be used, providing the necessary precautions are observed.

WARNING

When using toxic solvents, make certain that adequate ventilation exists. Avoid prolonged or repeated breathing of the vapor. Avoid prolonged or repeated contact with skin. Flammable solvents shall not be used on energized equipment or near any equipment from which a spark may be received. Smoking, "hot work", etc. is prohibited in the immediate area.

CAUTION

When using trichlorethylene, avoid contact with painted surfaces, due to its paint removing effects.

5-2. TROUBLESHOOTING.

When a piece of equipment has been operating satisfactorily and suddenly fails, the cause of failure may be due to symptoms of past failures or due to component aging.

The first step in troubleshooting is to ascertain that proper equipment voltages are present, interconnecting cables are secure, and that all fuses are in functional condition. Refer to the appropriate modular units or linear power amplifier instruction manuals. for system fuse locations and functions.

NOTE

> Never replace a fuse with one of a higher rating unless brief continued operation is more important than probable equipment damage. If a fuse burns out immediately after replacement, do not replace it a second time until the cause has been located and corrected.

Visual troubleshooting of the modular unit chassis components and tube conditions may also help localize the fault.

SECTION 7
SCHEMATIC DIAGRAMS

S4002 INTERLOCK SWITCH	
POSITION	FUNCTION
1	PS COVERS
2	PA COVERS
3	AIR SWITCH
4	EXTERNAL
5	PS GRILLE
6	PS DRAWER
7	FILTER DRAWER
8	PA DRAWER
9	REAR PANEL
10	LEFT PANEL
11	RIGHT PANEL
12	TIMER

LAST SYMBOLS	MISSING SYMBOLS
C4000	
CB4001	
CR4000	
DS4000	
E4001	
J4001	
K4004	
R4002	
S4004	

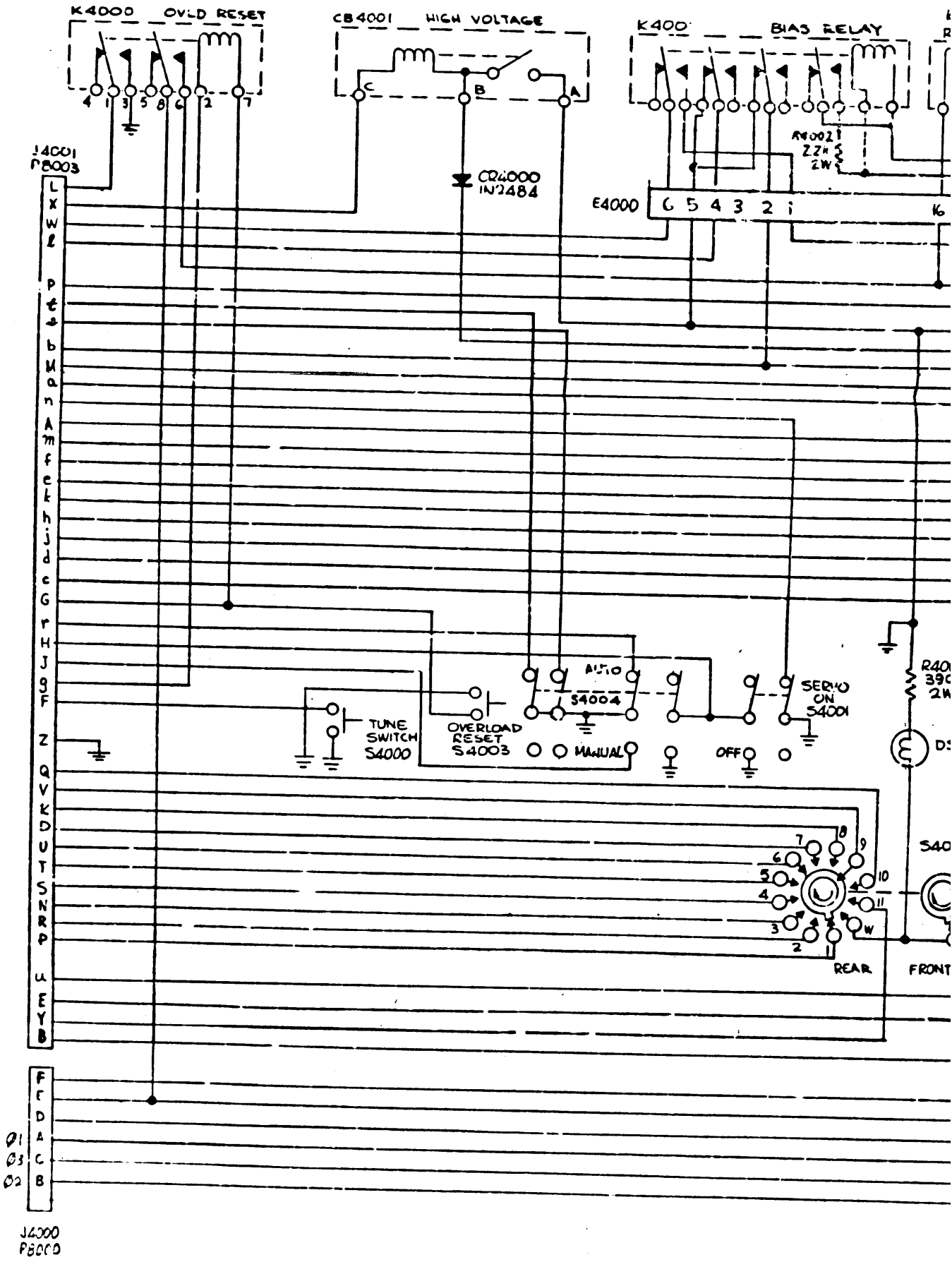

REVISIONS						
ZONE	LTR	DESCRIPTION	DATE	APPROVED		
	A	[illegible]				
	B	ADD PIN "L" ON J4001 & LEAD TO S4002 (NO)	7-8-W	1-3-73	[illegible]	
	C	K4004 REV. E & U ADDED IN J-H-C-I				
	D	ADDED K4002 & K4003 WAS [illegible]				
	E	ADDED NOTE				

BIAS RELAY

K4002 RESET — PLATE OVLD RELAY — OVLD

K4003 RESET — SCREEN OVLD RELAY — OVLD

K4004 INTERLOCK RELAY

R4002 2.2K 2W

R4000 20K 10W

E4001

C4000 75mfd 50v

SERVO ON S4001

R4001 390Ω 2W

DS4000

S4002

REAR — FRONT

CB4000 — MAIN POWER

LOAD

LINE

SEE NOTE

NOTE:

FOR OPERATION WITH GPTA 2.5 KJB, REMOVE WIRE FROM TERM. 5 & PLACE ON TERM. 4 AS SHOWN WITH DOTTED LINE.

CK1137 E1

NOTICE TO PERSONS RECEIVING THIS DRAWING

THE TECHNICAL MATERIEL CORPORATION claims proprietary right in the [illegible] This drawing is issued in confidence for information only and may not be [illegible] to manufacture anything shown hereon without permission from TH[illegible] TION to the user. [illegible] assistance and is subject to recall at any time.

Property of:

THE TECHNICAL MATERIEL CORPORATION
MAMARONECK, NEW YORK

MULTIMETER S2003	
POSITION	DESIGNATION
1	1ST AMPL I_P
2	2ND AMPL I_P
3	2ND AMPL E_P
4	IPA E_P

BLOWER

S2002 NC. NC.
NO. C. NO. C.
AIR SWITCH

1 3 4

S2000 NC. NC. S2001
NO. C. NO. C.
TOP INTERLOCK
BOTTOM INTERLOCK

14 12 11 2 17 18

J2000
RF INPUT

R2007
47

L2038
.68

C2000
1000 MMF

V2

R2000
2.7K

PLATE CURRENT
M2001

MULTIMETER
M2000

L2042
220

C2008
1000

C2013
.01

C2012
.01

C2004
0.01

C2005
0.01

J2000
P2000
A B C

C2009
1000

C2108
0.1

L2000
220

J2007, P2005
6 1 2

MULTIMETER
1 2 3 W

C2006

38 37 36 35 34 33 32 25 21 20 19 17 16 12 13 11 1 14 2 3 4 10 15 7 24 5 22

POSITION	2ND AMPL.	
1	2-3	2.0-2.5
2		2.5-3.0
3	3-4	3-5
4	4-5	
5	5-7	5-7
6	7-11	7-11
7	11-15	11-15
8	15-19	15-19
9	19-30	19-24
10		24-30

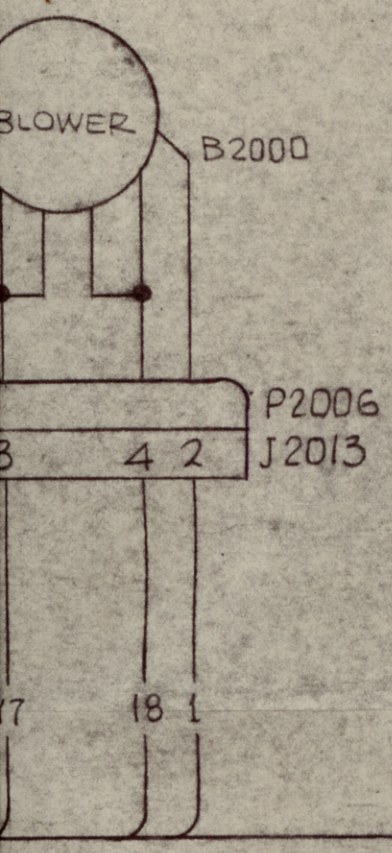

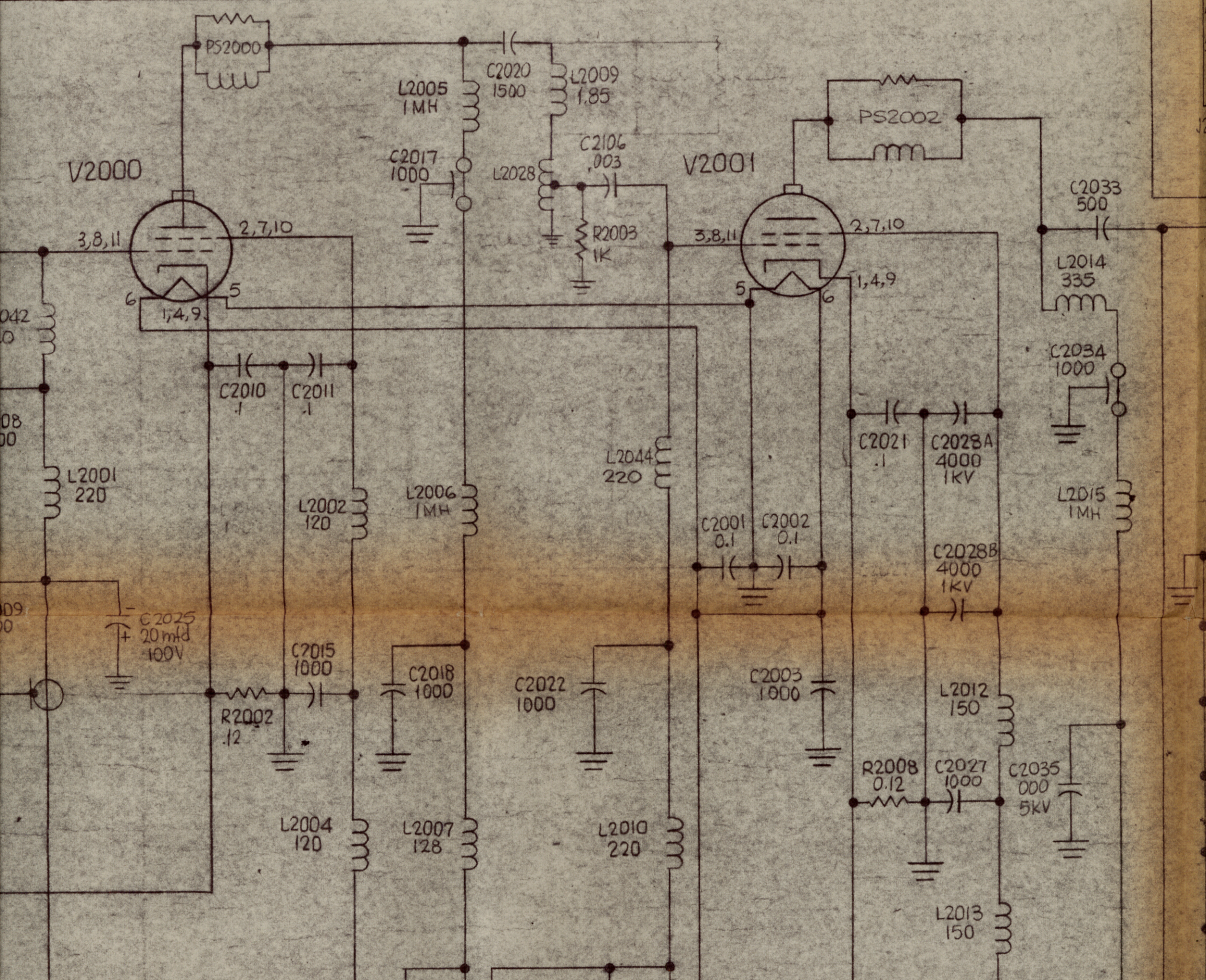

79 78 77 76 74 73 72 71 70 29 65 64 63 62 60 59 58 57 51

J2003

S2004-A

11R 10R 9R 8R 8F 9F 10F 11F W 12F 1F 6R 7R

2ND AMPL LEDEX

CR2000

9 8 7 6 5 4 3 2 1 22 21 10 12 13 14 11 23 20 19 18 17 16 15

P2002 J2005

38 37 25 16 13 20 21 36 35 34 33 32 19

8R 7R 6R 1F 12F 11F 10F 9F

8 9 7 6 5 4 3 2

E2000

C2042 150

C2021 .01

R2004 1K 15W

P52003

C2061 500

C2070 500

C2079 3

C2078 3

S2004-B

W 10 11 9 12 8 13 7 6 5 4

24-30 MC

19-24 MC

15-19 MC

11-15 MC

7-11 MC

5-7 MC

4-5 MC

C2112 18

L2024

L2023

L2022

L2021

L2020

L2019

L2018

L2016

C2045 5

C2046 15

R2020 2.2K

L2027 750

CR2004 IN3070

C2047 0.01

C2057 2000

R2022 470K

L2025 2.5 MH

UPPER RING

V2002

LOW RING

2, 6

1, 4, 7

3 5

CAP. P/O XV

C2055 1000 5KV

C2058 .01

C2059 0.01

L2031 150

C2056 1000 5KV

C2060 0.01

C2115 .01

L2032 150

C2114 .01

C2113 .01

L2049 185

C2014 .01

C2053

C2062 0.01

C2064 1000 5KV

C2063 0.01

S2005-A

S2005-B

S2005-C

J2012

C2067 500 5KV

L2033 185

C2069 500 5KV

L2034 185

C2100 6800

C2071 6800

L2035 35

DS2000

DS2001

DS2002

DS2003

DS2004

DS2005

DS2006

DS2007

DS2008

CR2003

PA LEDEX

C2070 500

C2079 3

C2078 3

C2116 3

C2117 3

C2080 500

C2118 100

C2081 0-1500

C2102 .0015

L2036 270

L2939

S2008-A

L2037 270

L2040

C2065 2000 2KV

L2048

S2008-B

L2041

C2052 5

J2009 RF OUT

CR2007 IN 3070

R2047 4.7K

R2032 4.

C2093 1.00

R2031 1.2K

C2094 .1

C2095 .1

C2099 .1

CR2008

R2033 100K

L2043 33

R2030 10

R2034 2.2K

L2046 680

L2045 150

C2097 .01

C2098 .01

J2008

C2104 .01

J2011

J2000
RF INPUT

R2007
47

L2038
.68

R2000
2.7K

C2000
1000 MMF

V2000

3,8,11

6

1,4

PLATE
CURRENT

M2001

MULTI METER

M2000

C2013
.01

C2012
.01

C2004
0.01

C2005
0.01

L2042
220

C2008
1000

L2001
220

J2000
P2000

A B C

C2009
1000

C2025
20 mfd
100V

C2108
0.1

L2000
220

J2007, P2005

MULTIMETER

W

1 2 3 4

S2003

C2006
0.1

C2007
0.1

C2109
.1

C2107
0.1

38 37 36 35 34 33 32 25 21 20 19 17 18 16 12 13 11 1 14 2 3 4 10 15 7 24 5 22 23 9 8 6

15 26

44 28 45 3

J2001

SYM	DESCRIPTION	DATE	E.M.N. NO.	DRAFT	CHKD	APPD
X4	R2001, 2005 DEL., L2042 L2044, C2025, C2026 ADDED	12-15-66				
X3	L2025 ADDED R2024 DELETED	11-14-66				
X2	REVISED & UPDATED	11-8-66				
X1	UPDATED	10-25-66				
X	EXP. RELEASE	10-17-66				

REVISIONS

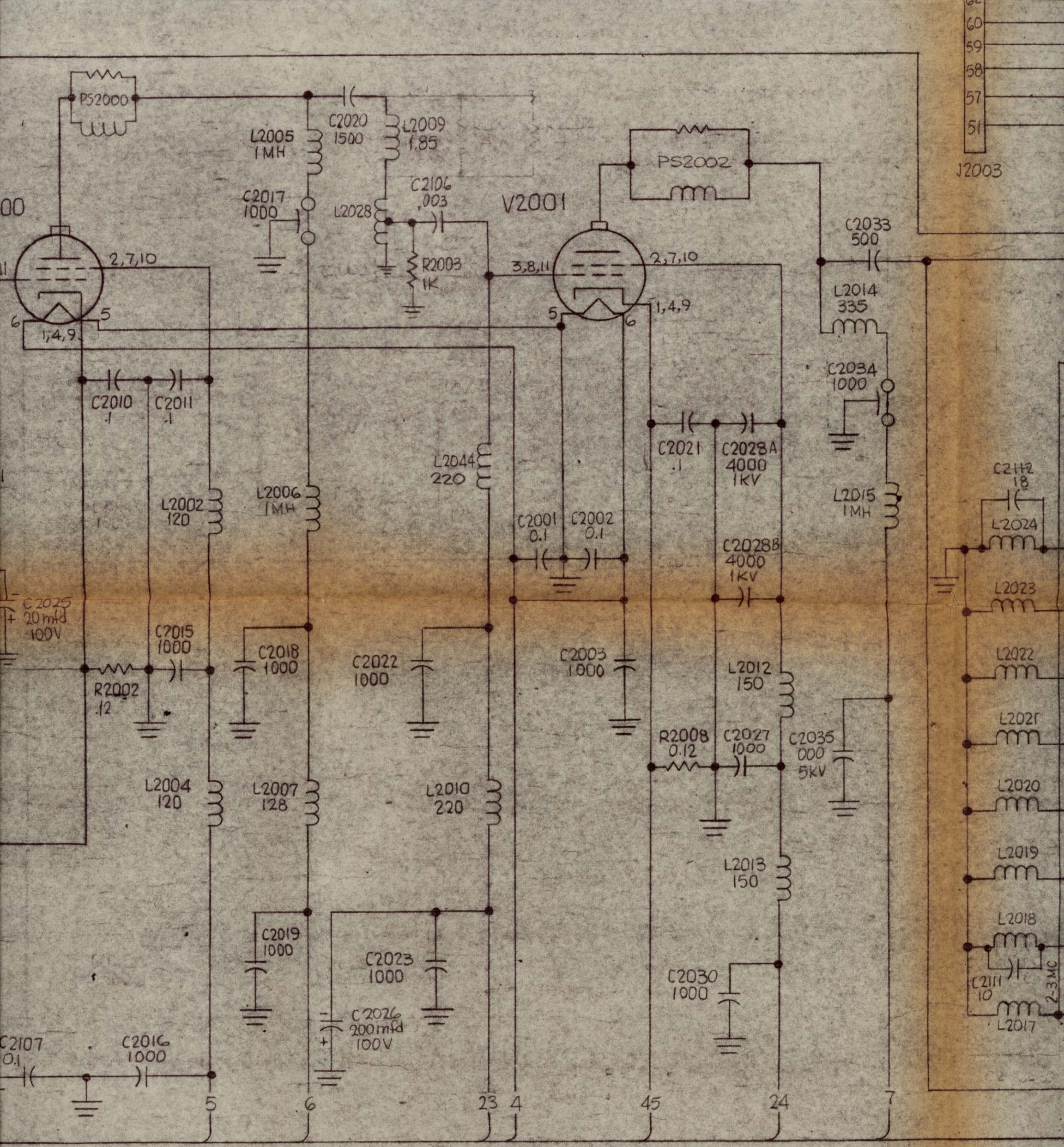

UNLESS OTHERWISE SPECIFIED:
ALL RESISTORS ARE IN OHMS
ALL COILS ARE IN MICROHENRIES
ALL WHOLE CAPACITORS ARE IN PICOFARADS.
ALL FRACTIONAL CAPACITORS ARE IN MICROFARADS.

LAST SYMB
B2000
C2118
CR200
DS200
E2000
J2013
L2049
M2001
P2006
R2047
S2008
V2002
PS200

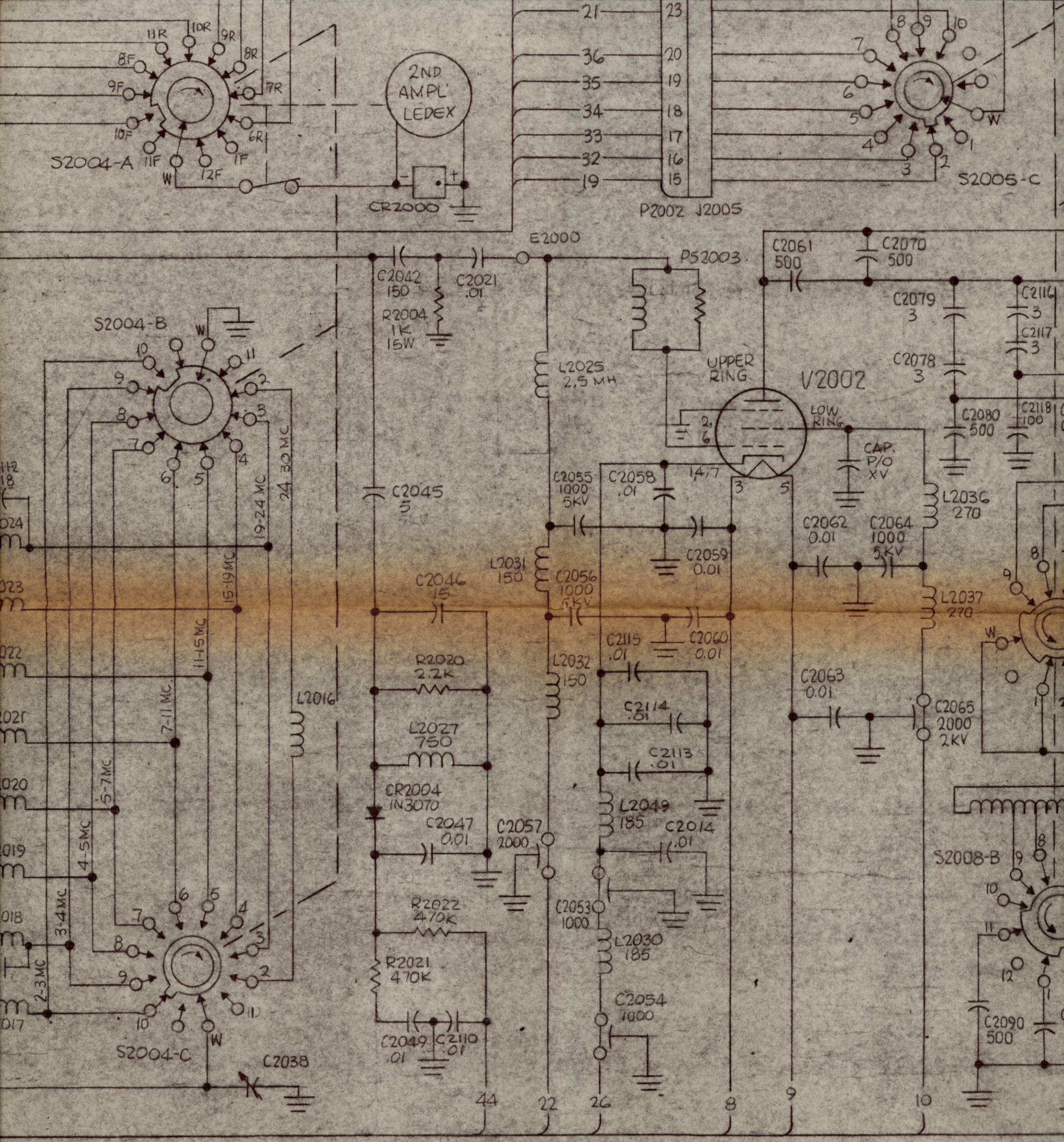

2000, 2100 SERIES	
ST SYMBOL	MISSING
2000	
2118	C2014, 24 32, 36, 37, 39, 40, 41, 43, 44, 48, 50, 51, 31
	66, 68, 72-77, 82-87, 91, 96, 2105
R2008	CR2001, 02, 05, 06
S2008	
2000	
2013	J2002, 04, 06
2049	L2011, 26, 29, 47, 03, 08
2001	
2006	P2001, 03, 04,
2047	R2002, 09-19, 26, 27, 28, 35, 36, 37, 38, 40-47, 23, 06, 25, 29, 24, 01, 05
2008	S2006, 07
2002	
S2003	

BREAKOUT NO.	
LAST	MISSING
45	27, 29, 30, 31, 39, 40, 41, 42, 43

CR2003

PA
LEDEX

005-C

DS2003
DS2004
DS2005
DS2006
DS2007
DS2008

M
D
F
L
N

L2035
35

C2116
3
C2117
3

C2118
100
C2081
0-1500

C2102
.0015

L2939

S2008-A

L2040

L2048

C2090
500
C2088
500
C2089
0-2000

CR2007
IN3070
R2047
4.7K
R2032
4.
C2093
1.00
R2031
1.2K
C2094
.1
C2095
.1
C2099
.1
CR2008
R2033
100K
L2043
33
R2030
10
R2034
2.2K
L2046
680
L2045
150
C2097
.01
C2098
.01

J2008
C2104
.01

L2041
C2052
5
J2009
RF OUT

C2103
2500
R2039
47
2W
J2010
MONITOR

R2029
500K
ALDC
ADJUST
C2092
.01
J2011

28

MIT

PROTO-TYPE DRAWING
NOT FOR PRODUCTION
Engineering Approval Required For Release
App. By

THE TECHNICAL MATERIEL CORP.
MAMARONECK, NEW YORK
F BUDETTI

TITLE
DIAGRAM, SCHEMATIC

DRAWN	DATE 10-13-66	FINAL APPROVAL	DATE
CHECKED	DATE		
ELECT. DES.	DATE	CK1221	X4
MECH. DES.	DATE	SHEET	REV. LTR

TLAB-2.5K
MODEL

M/L

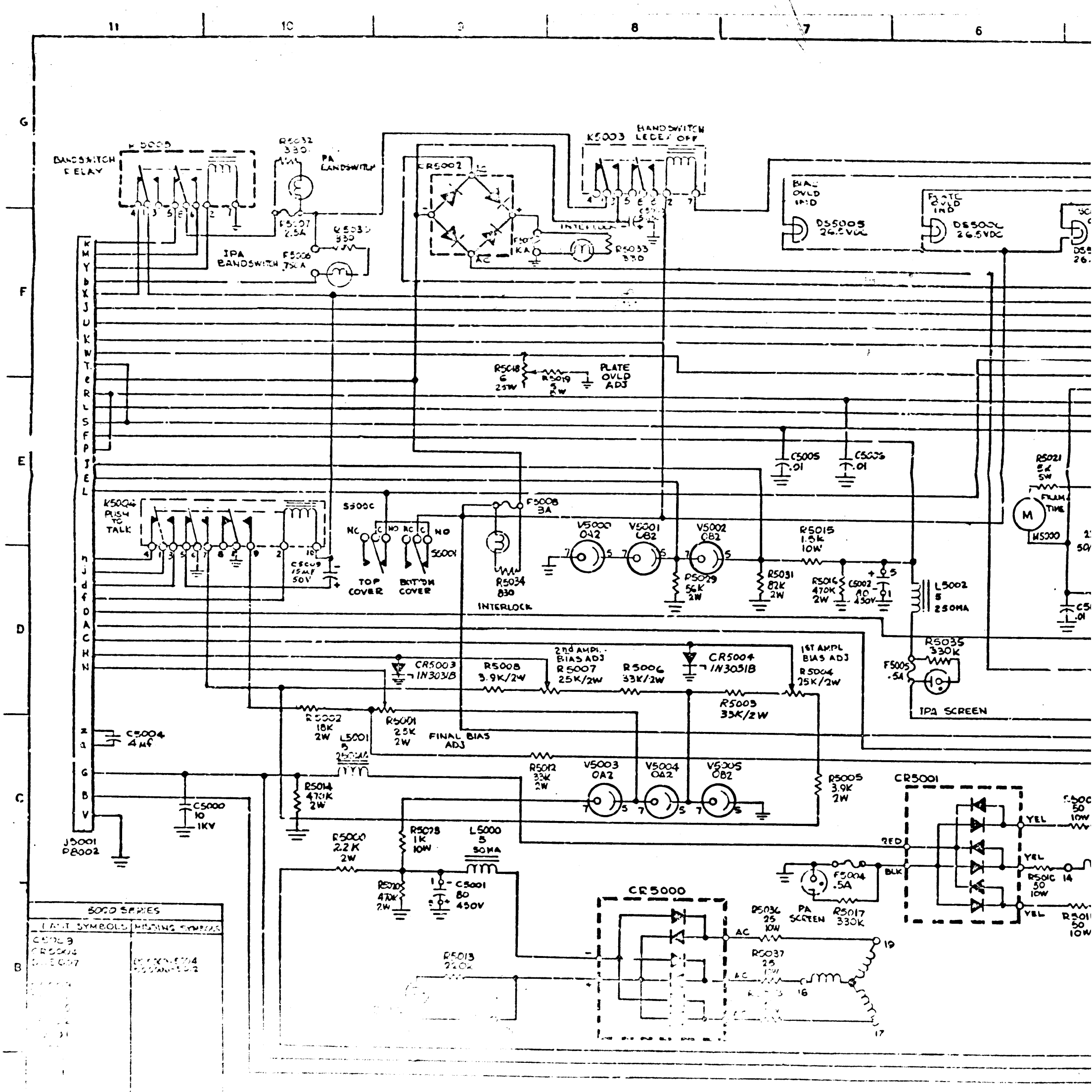

NOTICE TO PERSONS RECEIVING THIS DRAWING
THE TECHNICAL MATERIAL CORPORATION
MAMARONECK, NEW YORK

CK1045 C

J5000
P5001
M5001
PLATE TIME
R5022
5K
5W
BLOWER
R5023
22K
F5002
3A
R5024
220K
F5001
3A
F5000
5A
LV.
FIL.
T5001
220VAC
50/60~
C5008
.01
K5000
FILAMENT ON RELAY
SCREEN ON
SERVOS ON OFF
K5001
R5026
50
5W
R5027
2.5K
25W
SCREEN
OVLD
ADJ
6.3VAC
17A
13.8VAC
3A
5.2VAC
1A
22.5VAC
2A
C5007
.01
220V
50/60CPS
R5021
5K
5W
FLAM
TIME
M5300
SCREEN
OVLD
IND
DS5007
26.5VDC
FOCUS
OVLD
IND
DS5006
26.5VDC
L5002
5
250MA
R5035
330K
F5005
.5A
IPA SCREEN
C5006
.01
R5009
50
10W
R5010
50
10W
R5011
50
10W
YEL
CR5001
RED
BLK
R5005
R5017
330K

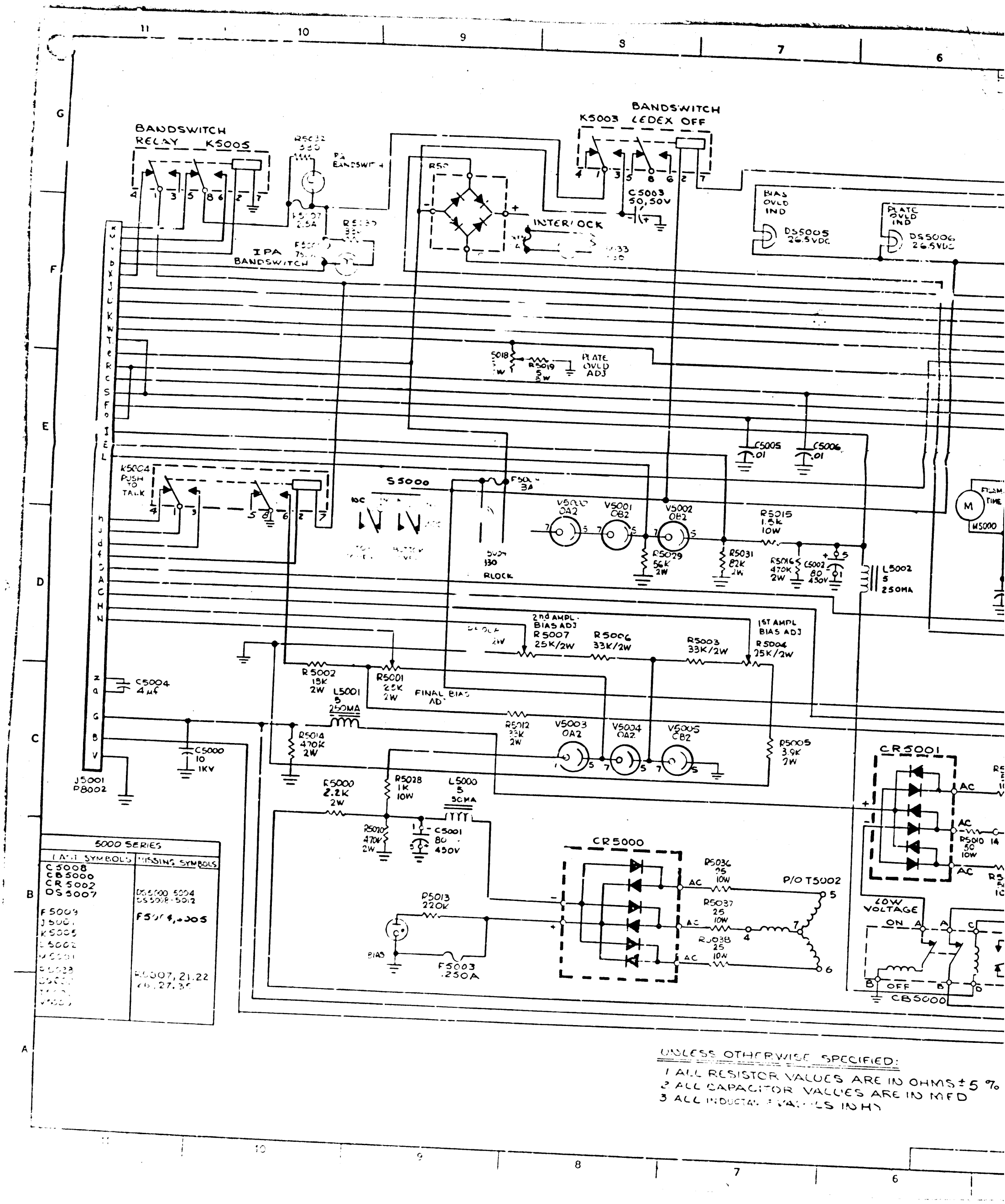

5000 SERIES	
LAST SYMBOLS	MISSING SYMBOLS
C5008	
CB5000	
CR5002	
DS5007	DS5000, 5004 DS5008-5012
F5009	F5001-5005
J5001	
K5005	
L5002	
M5001	
R5038	R5007, 21, 22 26, 27, 35
S5001	
T5002	
V5005	

UNLESS OTHERWISE SPECIFIED:

1 ALL RESISTOR VALUES ARE IN OHMS ± 5 %
2 ALL CAPACITOR VALUES ARE IN MFD
3 ALL INDUCTANCE VALUES IN HY

REVISIONS						
LTR	SYM	DESCRIPTION	DATE	APVD	DRAFT	CHK	ENGR
	X	EXP. RELEASE					
	X_1	REVISED & UPDATED	3-5-68				
	X_2	CR5001, CR5002 CLARIFIED RES VALUES WERE ± 10%	4-3-68				
	X_3	REVISED K5004	4-5-68				
	Ø	ORIG. RELEASE FOR PRODUCTION	4-15-68				

PLATE OVLD IND DS5006 26.5VDC

SCREEN OVLD IND DS5007 26.5VDC

T5000
- 1
- 2
- 5 — 6.5VAC 17A
- 6 C.T.
- 7
- 8, 9 — 13.8VAC 3A
- 10, 11 — 5.2VAC 1A
- 3, 4 — 26.5VAC 25A

FILAM. TIME M5000

220V 50/60CPS

C5007 .01

L5002 5 250MA

C5008 .01

K5000 FILAMENT ON RELAY

T5002
- 1, 2, 3 — 3Ø 220VAC 50/60~

M5001 PLATE TIME

K5001 SERVOS ON-OFF

BLOWER — R5023 220K — F5002 3A

SSB / CW — FSK — MODE S5002

CR5001

R5009 50 10W — AC — 15

AC — R5010 50 10W — 14 — 16

AC — R5011 50 10W — 13

SCREEN ON

K5002

T5001
- 1
- 3, 2, 4 — 3Ø 220VAC 50/60~
- 12, 10, 11, 9
- 5, 7, 6, 8

L.V. — F5001 2A — R5024 220K

F5000 5A — R5025 220K — FILAMENT

LOW VOLTAGE ON — A, A, C — N.O. — C — N.C. — B OFF — B — D — CB5000

J5000 P8001

CK 1464

SE SPECIFIED:
ALUES ARE IN OHMS ± 5 % ½ WATT
VALUES ARE IN MFD
LS IN HY

NOTES

NOTICE TO U.S. GOVERNMENT RELEASING THIS DRAWING
THE TECHNICAL MATERIEL CORPORATION claims proprietary right in the material disclosed hereon. This drawing is issued in confidence for engineering information only and may not be copied or used to manufacture anything shown hereon without permission from THE TECHNICAL MATERIEL CORPORATION to the undersigned for mutual assistance and is to be returned upon request.
Printed by GS
THE TECHNICAL MATERIEL CORPORATION
MAMARONECK, NEW YORK

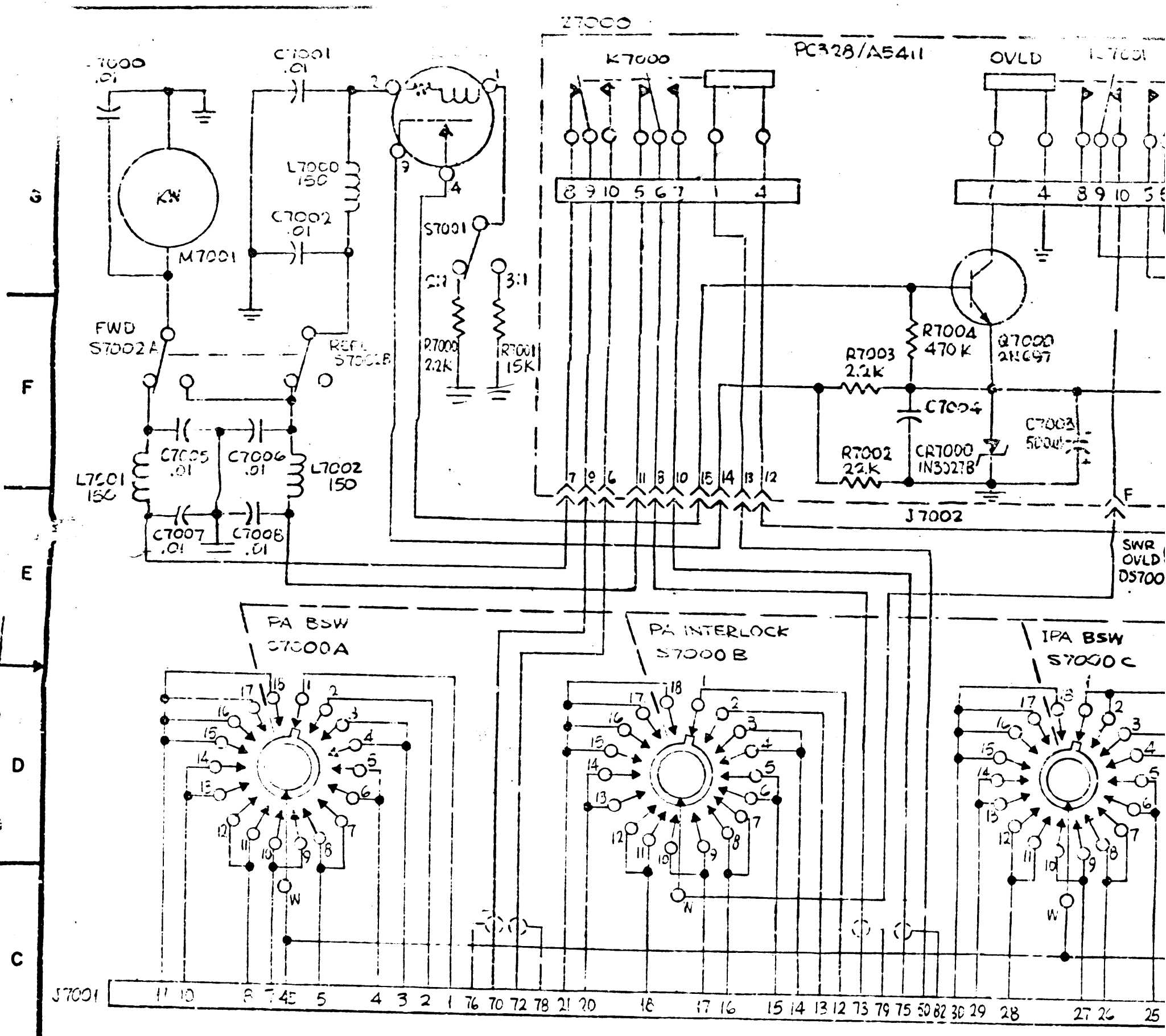

7000 SERIES	
ALL SERIES	MOUNTING SYMBOL
A7000	
BS7001	U37000
F7000	
J7001	J7000
K7000	
L7001	
L7002	
M7001	
R7003	R7001,7002,7003,7005
S7001	
S7002	
CR7000	
CR7001	CR7001,7002,7003
Q7000	

UNLESS OTHERW
DIMENSIONS A
TOLERA
FRACTIONS DEC
±1/6 ±.0

MATERIAL

NOTICE TO PERSONS RECEIVING THIS DRAWING

THE TECHNICAL MATERIEL CORPORATION claims proprietary right in the matter disclosed hereon. This drawing is issued in confidence for engineering information only and may not be copied or used to manufacture anything disclosed hereon without permission from THE TECHNICAL MATERIEL CORPORATION to the user. [illegible] assistance and is subject to recall at any time.

Property of:
THE TECHNICAL MATERIEL CORPORATION
MAMARONECK, NEW YORK

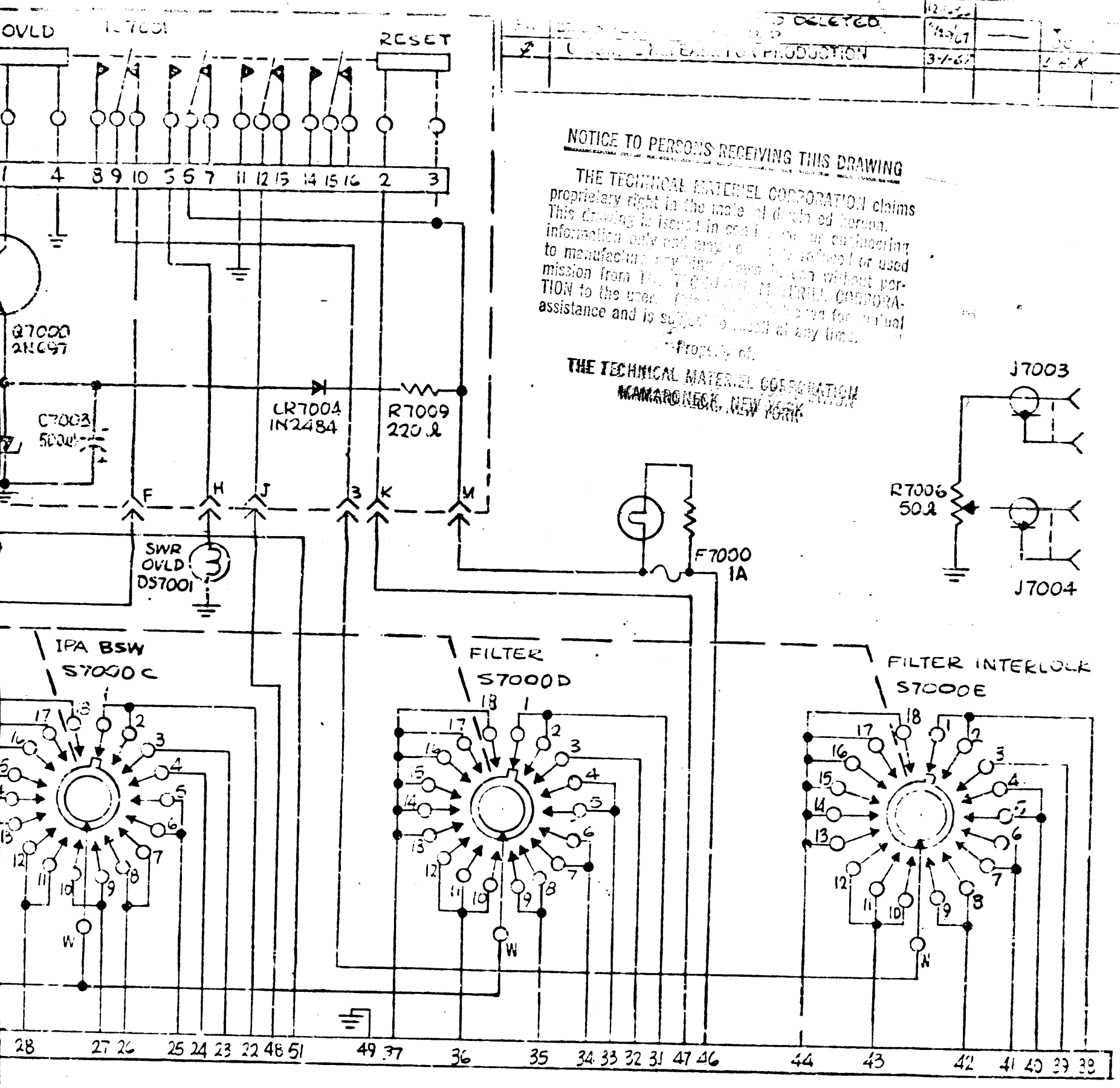

QTY REQ	ITEM	PART NO.	DESCRIPTION
			DELETED

UNLESS OTHERWISE SPECIFIED DIMENSIONS ARE IN INCHES TOLERANCES ON FRACTIONS DECIMALS ANGLES ±1/64 ±.005 ±1/2°	FINAL APPR.	DATE	THE TECHNICAL [illegible]
	MECH. ENG.		
	ELECT. ENG.		
MATERIAL	CHECKED		
	DRAWN		
	APPD		